L68M, L68C - Olympian Plus plug-in system Lubricators

- Port size: 3/4" ... 1 1/2" (ISO G/PTF)
- Micro-fog plug-in lubricators for best lubrication in general purpose pneumatic applications
- Oil-fog option available

Technical features

Medium:
Compressed air only

Maximum operating pressure:
17 bar (246 psi)
10 bar (145 psi) for 5 litre bowl only

Start point:
Minimum flow required for lubricator operation at 6,3 bar (91 psi) inlet pressure
Micro or Oil-fog:
6 dm3/s (13 scfm)
High flow lubricator:
52 dm3/s (110 scfm)

Flow:
Micro & Oil-fog:
175 dm3/s (371 scfm)
High flow: 400 dm3/s (848 scfm)
Port size 1",
Operating pressure:
6,3 bar (91 psi)
Δp: 0,5 bar (7 psi)

Bowl size:
0,5, 1 or 5 litre (17, 34 or 169 fluid oz)

Drain:
Without standard
Manual optional

Ambient/Media temperature:
-20 ... +80°C (-4 ... +176°F)
Air supply must be dry enough to avoid ice formation at temperatures below +2°C (+35°F).

Materials:
Body and yoke: Aluminium
Bowl: Aluminium (0,5 and 1 l); Steel (5 l)
Sight glass: Pyrex (0,5 and 1l); PA (5 l)
Sight dome: Grilamid TR55
Elastomers: NBR

Technical data L68C - Oil-fog lubricators; standard models

Symbol	Port size	Size	Weight (kg)	Model
	G3/4	–	2,10	L68C-6GP-ERN
	G1	Basic	2,04	L68C-8GP-ERN
	G1 1/4	–	2,08	L68C-AGP-ERN
	G1 1/2	–	2,12	L68C-BGP-ERN
	Without yoke	–	0,94	L68C-NNP-ERN

Technical data L68M - Micro-fog lubricators; standard models

Symbol	Port size	Size	Weight (kg)	Model
	G3/4	–	2,10	L68M-6GP-ERN
	G1	Basic	2,04	L68M-8GP-ERN
	G1 1/4	–	2,08	L68M-AGP-ERN
	G1 1/2	–	2,12	L68M-BGP-ERN
	Without yoke	–	0,94	L68M-NNP-ERN

Option selector

L68★-★★★-★★★

Type	Substitute
Oil-fog	C
Micro-fog	M
Port size	**Substitute**
3/4"	6
1"	8
1 1/4"	A
1 1/2"	B
Without yoke	N
Threads	**Substitute**
PTF	A
ISO G parallel	G
Without	N

Quick fill device	Substitute
Without (standard)	N
With	Q
Bowl	**Substitute**
0,5 l (standard)	R
1 l	U
5 l	V
Drain	**Substitute**
Closed bottom (standard)	E
Manual	M
Type	**Substitute**
Standard	P
»High flow« lubricator	E

Our policy is one of continued research and development. We therefore reserve the right to amend, without notice, the specifications given in this document. (2001 - 8094d) © 2024 IMI International s.r.o.

Flow characteristics
Oil-fog, Port size 1"

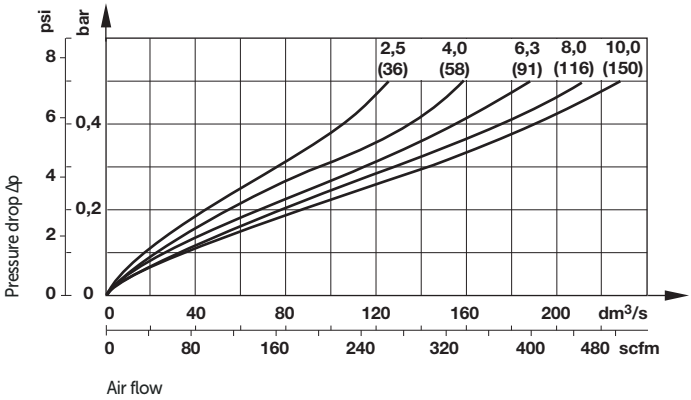

Micro-fog, Port size 1"

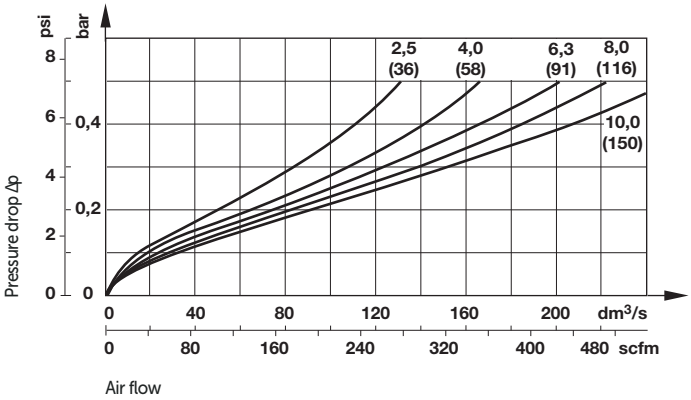

"High flow", Port size 1"

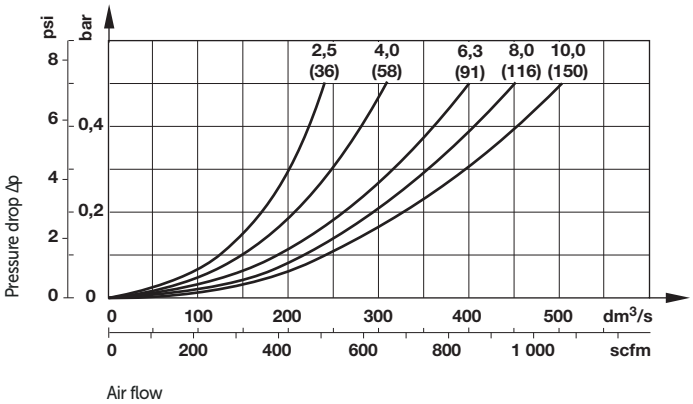

Accessories

Thread	Single yoke	Double yoke	End connector kit	Single yoke non threads	3/2 Shut-off valve Threaded inlet only	Threaded outlet only	Bracket mounting
G3/4	Y68A-6GN-N1N	Y68A-6GN-N2N	5524-55	74785-98	T68H-6GB-B2N	T68H-6GC-B2N	18-001-979
G1	Y68A-8GN-N1N	Y68A-8GN-N2N	5524-52		T68H-8GB-B2N	T68H-8GC-B2N	18-001-979
G1 1/4	Y68A-AGN-N1N	Y68A-AGN-N2N	5523-52		T68H-AGB-B2N	T68H-AGC-B2N	18-001-978
G1 1/2	Y68A-BGN-N1N	Y68A-BGN-N2N	5523-93		T68H-BGB-B2N	T68H-BGC-B2N	18-001-972
3/4 PTF	Y68A-6AN-N1N	Y68A-6AN-N2N	5524-53		T68H-6AB-B2N	T68H-6AC-B2N	18-001-979
1 PTF	Y68A-8AN-N1N	Y68A-8AN-N2N	5524-50		T68H-8AB-B2N	T68H-8AC-B2N	18-001-979
1 1/4 PTF	Y68A-AAN-N1N	Y68A-AAN-N2N	5523-50		T68H-AAB-B2N	T68H-AAC-B2N	18-001-978
1 1/2 PTF	Y68A-BAN-N1N	Y68A-BAN-N2N	5523-95		T68H-BAB-B2N	T68H-BAC-B2N	18-001-972

Nut	Quick fill device	Porting block
5520-89	18-011-021	18-026-986 (G1/4 & G1/2)
		18-026-983 (1/4 & 1/2 NPT)

Service kit

Service kit
L68C-KIT (Oil-fog)
L68M-KIT (Micro-fog)

Our policy is one of continued research and development. We therefore reserve the right to amend, without notice, the specifications given in this document. (2001 - 8094d) © 2024 IMI International s.r.o.

Dimensions

Dimensions in mm
Projection/First angle

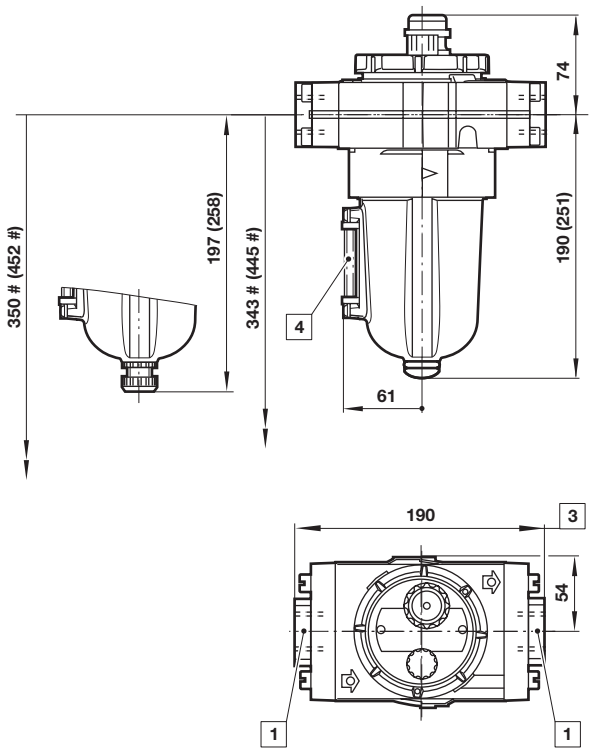

5 litre bowl

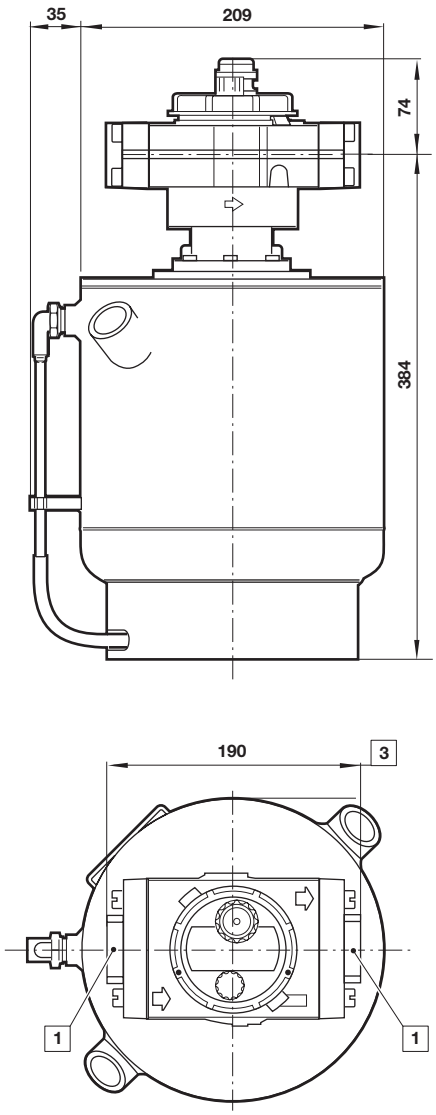

Minimum clearance required to remove bowl
( ) values for 1 litre bowl
1 Main ports 3/4", 1", 1 1/4" or 1 1/2"
3 Plus 10 mm for ports 1 1/4" or 1 1/2"
4 Sight glass

Our policy is one of continued research and development. We therefore reserve the right to amend, without notice, the specifications given in this document. (2001 - 8094d) © 2024 IMI International s.r.o.

Single yoke with bracket

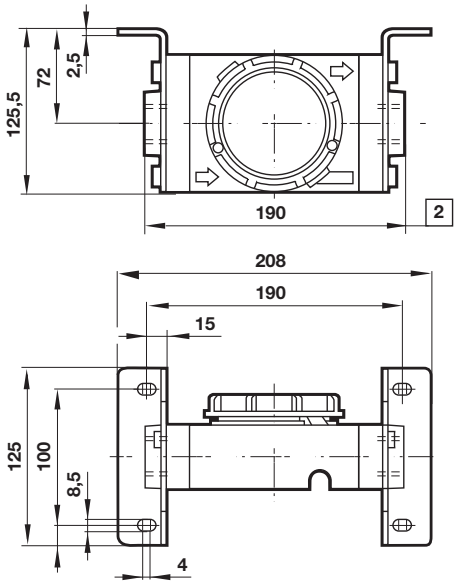

1 For 1 1/4" and 1 1/2" ported yokes add 10 mm

Double yoke with bracket

Dimensions in mm
Projection/First angle

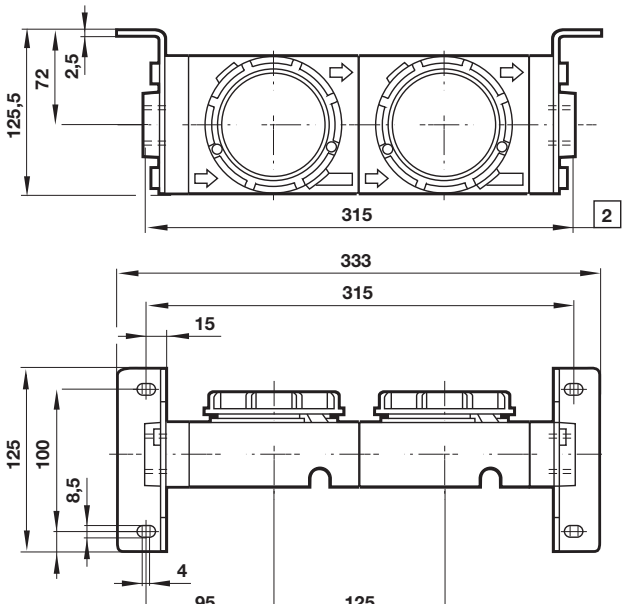

1 For 1 1/4" and 1 1/2" ported yokes add 10 mm

3/2 Shut-off valve

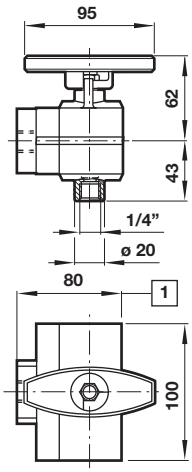

1 For 1 1/2" ported yokes add 5 mm

Porting block

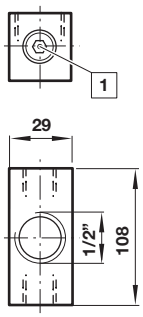

1 Two additional plugged G1/4 ports

Warning

These products are intended for use in industrial compressed air systems only. Do not use these products where pressures and temperatures can exceed those listed under »Technical features/ data«.
Before using these products with fluids other than those specified, for non-industrial applications, life-support systems or other applications not within published specifications, consult Norgren.
Through misuse, age, or malfunction, components used in fluid power systems can fail in various modes.

The system designer is warned to consider the failure modes of all component parts used in fluid power systems and to provide adequate safeguards to prevent personal injury or damage to equipment in the event of such failure.
System designers must provide a warning to end users in the system instructional manual if protection against a failure mode cannot be adequately provided.
System designers and end users are cautioned to review specific warnings found in instruction sheets packed and shipped with these products.

Our policy is one of continued research and development. We therefore reserve the right to amend, without notice, the specifications given in this document. (2001 - 8094d) © 2024 IMI International s.r.o.