PRA/802000/M, RA/802000/M, RA/8000, RA/8000/M ISOLine™ 15552 cylinder, double acting

- ø 32 ... 320 mm
- High performance adaptive cushioning system "ACS"
- Low temperature version up to -40 °C
- High temperature version up to +150 °C
- 16 bar version available
- Rail Cylinder Shock and vibration tested to EN 61373 Category 1; Class A + B

Technical features

Medium:
Compressed air, filtered, lubricated or non-lubricated

Standard:
ISO 15552

Operation:
Double acting, adjustable cushioning

Operating pressure:
ø 32 ... 125 mm (Profile barrel)
1 ... 12 bar (14 ... 174 psi)
ø 32 ... 200 mm (Round barrel)
1 ... 16 bar (14 ... 232 psi)
ø 250 & 320 mm (Round barrel)
1 ... 10 bar (14 ... 145 psi)

Ports:
G1/8 ... 1

Cylinder diameters:
32, 40, 50, 63, 80, 100, 125, 160, 200, 250, 320 mm

Standard strokes:
25, 50, 80, 100, 125, 160, 200, 250, 320, 400, 500 mm

Non-standard strokes:
ø 32 ... 125 mm (5 ... 2800 mm)
ø 160 ... 320 mm (5 ... 2600 mm)

Operating temperature:
ø 32 ... 125 mm
"Standard version"
-20 ... +80 °C (-4 ... +176 °F)
ø 160 ... 320 mm
"Standard version"
-10 ... +80 °C (+14 ... +176 °F)
ø 32 ... 320 mm
"High temperature version" (T)
0 ... +150 °C (-17,7 ... +302 °F)
ø 32 ... 200 mm
"Low temperature version" (L)
-40 max. ... +80 °C (-40 ... +176 °F)
Air supply must be dry enough to avoid ice formation at temperatures below +2 °C (+35 °F)

.

Standard Materials:
Barrel: Anodised aluminium
End covers: Pressure diecast aluminium (ø 200 ... 320 mm gravity cast aluminium)
Piston rod: Stainless steel (martensitic)
Piston rod seals: PUR (ø 160 ... 320 mm NBR)
Piston seals: PUR (ø 160 ... 320 mm NBR)
'O'-rings: NBR

Technical data

Cylinder ø (mm)	32	40	50	63	80	100	125	160	200	250	320
Profile barrel	•	•	•	•	•	•	•				
Round barrel	•	•	•	•	•	•	•	•	•	•	•
Port size	G1/8	G1/4	G1/4	G3/8	G3/8	G1/2	G1/2	G3/4	G3/4	G1	G1
Piston rod ø (mm)	12	16	20	20	25	25	32	40	40	50	63
Piston rod thread	M10 x 1,25	M12 x 1,25	M16 x 1,5	M16 x 1,5	M20 x 1,5	M20 x 1,5	M27 x 2	M36 x 2	M36 x 2	M42 x 2	M48 x 2
Cushion length (mm)	20	22	24	24	26	33	39	43	43	55	60
Cushioning Adaptive cushioning systems "ACS"	•	•	•	•	•	•	•				
Cushioning (adjustable cushion)								•	•	•	•
Initial cushion volume (cm3)	12,8	20,2	36	64	111	235	427	784	1273	2534	4559
Theoretical thrusts at 6 bar outstroke (N)	482	754	1178	1870	3016	4710	7363	12064	18840	29436	48228
Theoretical thrusts at 6 bar instroke (N)	414	633	990	1680	2722	4416	6882	11310	18090	28236	47292
Air consumption at 6 bar outstroke (l/cm)	0,056	0,088	0,137	0,218	0,35	0,55	0,86	1,41	2,2	3,44	5,63
Air consumption at 6 bar instroke (l/cm)	0,048	0,074	0,114	0,195	0,32	0,51	0,79	1,32	2,1	3,3	5,41

Our policy is one of continued research and development. We therefore reserve the right to amend, without notice, the specifications given in this document. (2016 - 9159m) © 2024 Norgren GmbH

The function

The new "ACS" Adaptive Cushioning System provides a high performance pneumatic damping function. The system will automatically cushion for a wide range of general applications as delivered. Manual adjustment is still possible for extreme applications.

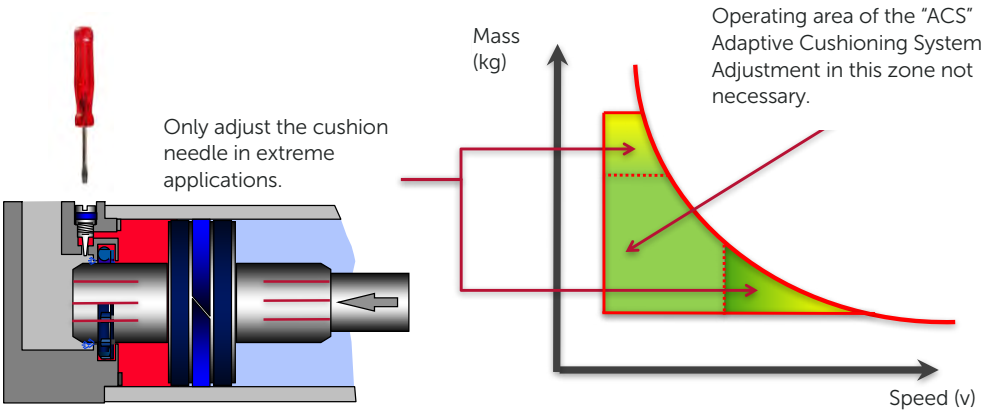

Design and sizing in pneumatics

Golden Rules

Design and sizing in pneumatics is often based upon experience coupled with an element of fear of under specifying crucial equipment. In an attempt to ensure enough power, engineers may select over sized cylinders and then select over sized valves to supply them with enough air. The same uncertainty can also lead to over sized specification of air line equipment, fittings and tubing.
The outcome is components larger than necessary that use too much compressed air and waste energy and money.
However when following some well proven golden rules and a few laws of pneumatics it is easy to achieve correctly sized pneumatic installations.

Basics to Consider

The force required, the pressure available, the speed of movement and air consumption. ISO and VDMA standard or compact style also cushioning and sensors. Cylinders are greased on assembly and operate under normal conditions without additional lubrication. However using a lubricator will extend the life of these products.

Golden Rule:

The theoretical force of the cylinder should be 25% extra for high speed, 50% extra for low speed and 100% extra for ultra low speed (positioning) applications.

The correct sizing is based upon the required force and applied pressure. Go to page 1 for more information on cylinder sizing and air consumption.

Load and Buckling

For applications with high side loading, use pneumatic slide actators or standard cylinders fitted with guide units. Alternatively external guide bearings should be installed. When a long stroke length is specified, care must be taken to ensure the rod length is within the limits for prevention of buckling. The table shows the maximum stroke length for a variety of installation arrangements.

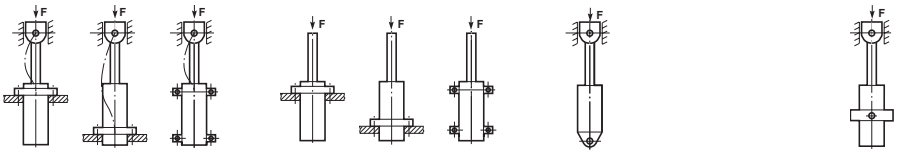

Cylinder ø (mm)	Piston rod ø (mm)	Load case 1 Pressure (bar)				Load case 2 Pressure (bar)				Load case 3 Pressure (bar)				Load case 4 Pressure (bar)			
		4	6	10	16	4	6	10	16	4	6	10	16	4	6	10	16
32	12	1100	860	650	500	500	390	290	210	650	520	380	290	760	600	450	340
40	16	1600	1200	950	730	730	580	430	320	940	750	560	430	1100	880	660	500
50	20	2000	1600	1200	930	930	740	550	420	1200	960	720	550	1400	1100	840	640
63	20	1500	1200	930	720	720	570	420	310	930	740	550	420	1100	860	650	490
80	25	1900	1500	1100	880	880	700	510	380	1100	910	680	510	1300	1100	800	600
100	25	1500	1200	880	670	670	520	380	270	880	690	510	370	1000	820	600	450
125	32	2000	1600	1200	910	910	710	520	380	1200	940	690	520	1400	1100	820	620
160	40	2400	1900	1500	1100	1100	880	640	480	1400	1200	860	640	1700	1400	1000	760
200	40	1900	1500	1100	860	860	670	480	350	1100	890	650	480	1300	1000	770	580
250	50	2400	1900	1400	1100	1100	850	620	440	1400	1100	830	610	1700	1300	980	730
320	63	2600	2400	1800	1400	1400	1100	780	570	1800	1400	1000	780	2100	1700	1200	930

Our policy is one of continued research and development. We therefore reserve the right to amend, without notice, the specifications given in this document. (2016 - 9159m) © 2024 Norgren GmbH

Additional ISO 15552 Cylinder ranges (Cylinder ranges in the red frame are shown in this data sheet.)

Symbols		Profile barrel	Round Barel	Industrial Automation	Food & Beverage	Automotive	ATEX II 2GD	Rail *1)	CE-marked	ø (mm)	Range	Discription	Datasheet
		•		•	•	•	•	•	•	32 ... 125	PRA/802000 LPRA/802000	Double Acting Cylinder	1_5_220_PRA_802000_M_RA_8000_M 1_5_225_PRA_802000_M_EX 1_5_220_LPRA_802000_M_LRA_8000_M
			•	•		•	•	•	•	32 ... 125	RA/802000 LPRA/802000	Double Acting Cylinder	1_5_220_PRA_802000_M_RA_8000_M 1_5_225_PRA_802000_M_EX 1_5_220_LPRA_802000_M_LRA_8000_M
			•	•		•	•	•	•	160 ... 320	RA/8000 LRA/8000	Double Acting Cylinder	1_5_220_PRA_802000_M_RA_8000_M 1_5_126_RA_8000_M_EX 1_5_220_LPRA_802000_M_LRA_8000_M
			•	•	•	•	•	•	•	32 ... 200	KA/802000	Stainless steel Cylinder	1_5_222_KA_802000_M 1_5_228_KA_802000_M_EX
		•		•	•		•		•	32 ... 100	PRA/822000	Smooth Line Cylinder	1_5_230_PRA_822000_M 1_5_235_PRA_822000_M_EX
		•		•	•		•		•	32 ... 100	PRA/842000	Clean Line Cylinder	1_5_240_PRA_842000_M 1_5_245_PRA_842000_M_EX
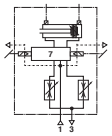		•		•		•	•		•	32 ... 100	PRA/862000	IVAC Industrial Cylinder	1_5_250_PRA_862000_M 1_5_255_PRA_862000_M_EX
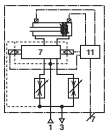		•		•	•	•	•		•	32 ... 100	PRA/882000	IVAC Clean Line Cylinder	1_5_260_PRA_882000_M 1_5_265_PRA_882000_M_EX
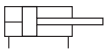		•		•	•	•	•		•	40 ... 125	PSA/802000/F1	Cylinder with position sensor	1_9_067_PSA_802000_F1 1_9_068_PSA_802000_F1_EX
			•	•		•	•		•	160 ... 320	SA/8000/F1	Cylinder with position sensor	Datasheet (standard) 1_9_062_SA_8000_F1_EX
		•		•	•	•		•		32 ... 100	PRA/801000, PRA/803000	Standard Single Acting Cylinder	1_4_101_PRA_801000_803000 -
			•	•		•		•		32 ... 100	RA/801000, RA/803000	Standard Single Acting Cylinder	1_4_101_PRA_801000_803000 -

• Range available. For additional information please contact the technical service or http://www.norgren.com
*1) Rail Cylinder Shock and vibaration tested to EN 61373 Category 1; Class A + B

Our policy is one of continued research and development. We therefore reserve the right to amend, without notice, the specifications given in this document. (2016 - 9159m) © 2024 Norgren GmbH

Cylinder variants

Symbol	Versions			Piston Rod Material				Standard Model with		ø	Description	Page
Please see the description below	H	L	T	R	S	C	D	Male Piston Rod Thread	Female Piston Rod Thread	(mm)		
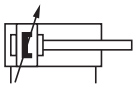	•	•	•	X	•	•	•	.PRA/802000/M	.PRA/802000/MX	32 ... 125	Standard Cylinder (Profile barrel)	9
	•	•	•	X	•	•	•	.RA/802000/M	.RA/802000/MX	32 ... 125	Standard Cylinder (Round barrel)	9
		•	•	X	•	•	•	.RA/8000/M	-	160 ... 320	Standard Cylinder (Round barrel)	10
		•	•	X	•	•	•	.RA/8000	-	160 ... 320	Standard Cylinder (Round barrel) without Magnet	10
				X	•	•	•	PRA/802000/W2	PRA/802000/W2X	32 ... 125	Cylinder with Special Wiper - Seal (suitable for appl. with cement, plaster (stucco), arizona sand, hoar-frost or ice)	12
				X	•	•	•	RA/802000/W2	RA/802000/W2X	32 ... 125		
				X	•	•	•	RA/8000/W2		160 ... 200		
				X	•	•	•	RA/8000/W1	-	160 ... 200	Cylinder with Special Wiper - Seal without Magnet	
				X	•	•	•	PRA/802000/X2	PRA/802000/X2X	32 ... 125	Low Friction Cylinder Operating pressure: 1 ... 10 bar, Medium: Compressed air, filtered and non-lubricated recomended	12
				X	•	•	•	RA/802000/X2	RA/802000/X2X	32 ... 125		
				X	•	•	•	RA/8000/X2	-	160 ... 200		
				X	•	•	•	RA/8000/X1	-	160 ... 200	Low Friction Cylinder without Magnet	12
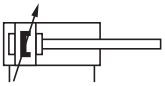	•	•	•	X	•	•	•	.PRA/802000/MU	.PRA/802000/MUX	32 ... 125	Cylinder with Extended Piston Rod ø 32 ... 125 mm (Stroke + Extension = 2800 mm) ø 160 ... 320 mm (Stroke + Extension = 2600 mm)	12
	•	•	•	X	•	•	•	.RA/802000/MU	.RA/802000/MUX	32 ... 125		
		•	•	X	•	•	•	.RA/8000/MU	-	160 ... 320		
		•	•	X	•	•	•	RA/8000/IU	-	160 ... 320	Cylinder with Extended Piston Rod without Magnet	
				X	•	•	•	PRA/802000/W6	PRA/802000/W6X	32 ... 125	Cylinder with Extended Piston Rod and Special Wiper - Seal suitable for appl. with cement, plaster (stucco), arizona sand, hoar-frost or ice	12
				X	•	•	•	RA/802000/W6	RA/802000/W6X	32 ... 125		
				X	•	•	•	RA/8000/W6	-	160 ... 200		
				X	•	•	•	RA/8000/W5	-	160 ... 200	Cylinder with Extended Piston Rod and Special Wiper - Seal without Magnet	
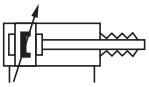			•	X	•	•	•	.PRA/802000/MG	.PRA/802000/MGX	32 ... 125	Cylinder with Piston Rod Bellows Maximum stroke: ø 32 mm = 1860 mm, ø 40 ... 320 mm = 2000 mm	14
			•	X	•	•	•	.RA/802000/MG	.RA/802000/MGX	32 ... 125		
			•	X	•	•	•	.RA/8000/MG	-	160 ... 320		
			•	X	•	•	•	.RA/8000/G	-	160 ... 320	Cylinder with Piston Rod Bellows without Magnet	
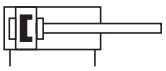			•	X	•	•	•	.PRA/802000/MW	.PRA/802000/MWX	32 ... 125	Cylinder without Cushioning	12
			•	X	•	•	•	.RA/802000/MW	.RA/802000/MWX	32 ... 125		
			•	X	•	•	•	.RA/8000/MW	-	160 ... 320		
			•	X	•	•	•	.RA/8000/W	-	160 ... 320	Cylinder without Cushioning without Magnet	
				X	•	•	•	PRA/802000/X4	PRA/802000/X4X	32 ... 125	Low Friction Cylinder without Cushioning Operating pressure: 1 ... 10 bar, Medium: Compressed air, filtered and non-lubricated recomended	12
				X	•	•	•	RA/802000/X4	RA/802000/X4X	32 ... 125		
				X	•	•	•	RA/8000/X4	-	160 ... 200		
				X	•	•	•	RA/8000/X3	-	160 ... 200	Low Friction Cylinder without Cushioning without Magnet	
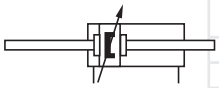	•	•	•	X	•	•	•	.PRA/802000/JM	.PRA/802000/JMX	32 ... 125	Cylinder with Double Ended Piston Rod	13
	•	•	•	X	•	•	•	.RA/802000/JM	.RA/802000/JMX	32 ... 125		
		•	•	X	•	•	•	.RA/8000/JM	-	160 ... 320		
		•	•	X	•	•	•	.RA/8000/J	-	160 ... 320	Cylinder with Double Ended Piston Rod without Magnet	
				X	•	•	•	PRA/802000/W4	PRA/802000/W4X	32 ... 125	Cylinder with Double Ended Piston Rod and Special Wiper - Seal with Magnet (suitable for appl. with cement, plaster (stucco), arizona sand, hoar-frost or ice)	9
				X	•	•	•	RA/802000/W4	RA/802000/W4X	32 ... 125		
				X	•	•	•	RA/8000/W4	-	160 ... 200		
				X	•	•	•	RA/8000/W3	-	160 ... 200	Cylinder with Double Ended Piston Rod and Special Wiper - Seal without Magnet	
		•	•	X	•	•	•	.PRA/802000/MT	.PRA/802000/MTX	32 ... 125	Four Position Cylinder Maximum stroke = stroke 1 + stroke 2 ø 32 mm = 700 mm, ø 40 mm = 1000 mm, ø 50 mm = 1000 mm, ø 63 mm = 900 mm, ø 80 mm = 1200 mm, ø 100 mm = 1100 mm, ø 125 mm = 1200 mm, ø 160 mm = 1200 mm, ø 200 mm = 1100 mm	13
		•	•	X	•	•	•	.RA/802000/MT	.RA/802000/MTX	32 ... 125		
		•	•	X	•	•	•	.RA/8000/MT	-	160 ... 200		
		•	•	X	•	•	•	.RA/8000/IT	-	160 ... 200	Four Position Cylinder without Magnet	
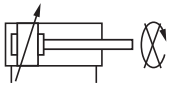				X				PRA/802000/N2	PRA/802000/N2X	32 ... 100	Cylinder with Non-Rotating Piston Rod Maximum stroke: 1000 mm	12
				X				RA/802000/N2	RA/802000/N2X	32 ... 100		
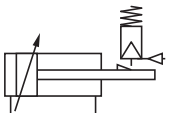				X	•	•	•	PRA/802000/L4	PRA/802000/L4X	32 ... 125	Cylinder with Locking unit (Passive) Spring force on removal of the signal to the unit. Operating pressure for locking unit: 4 ... 10 bar Maximum stroke: 2600 mm	15
				X	•	•	•	RA/802000/L4	RA/802000/L4X	32 ... 125		
				X	•	•	•	PRA/802000/L8	PRA/802000/L8X	32 ... 125	Cylinder with Locking unit (Passive) and Special Wiper - Seal Spring force on removal of the signal to the unit.. Operating pressure for locking unit: 4 ... 10 bar (suitable for appl. with cement, plaster (stucco), arizona sand, hoar-frost or ice) Maximum stroke: 2600 mm	15
				X	•	•	•	RA/802000/L8	RA/802000/L8X	32 ... 125		

Note: Versions: H = Hydraulic (ø 32 ... 100 mm); L = Low temperature -40 °C (-40 °F) (ø 32 ... 125 mm), -30 °C (-22 °F) (ø 160 ... 320 mm);
T = High temperature +150 °C (+302 °F); Piston Rod Material: C = Hard chromium plated; D = Stainless steel austenitic & hard chromium plated;
R = Stainless steel martensitic; S = Stainless steel austenitic; X = Standard; • = Option

Our policy is one of continued research and development. We therefore reserve the right to amend, without notice, the specifications given in this document. (2016 - 9159m) © 2024 Norgren GmbH

Option selector

★★★A/8★★★★★/★★★/★★★★

Non-standard variants	Substitute
Standard	None
Hydraulic version ø 32 ... 100 mm only	H
Low temperature version -40 °C (-40 °F) (ø 32 ... 125 mm) -30 °C (-22 °F) (ø 160 ... 320 mm)	L
High temperature version +150 °C max. (+302 °F)	T
Standard	**Substitute**
Round barrel	None
Profile barrel	P
Piston rod material	**Substitute**
Stainless steel martensitic	R
Stainless steel austenitic	S
Hard chromium plated	C
Stainless steel austenitic & hard chromium plated	D
Cushioning	**Substitute**
"ACS" (ø 32 ... 125 mm)	02
Standard (ø 160 ... 320 mm)	None
Cylinder ø (mm)	**Substitute**
032, 040, 050, 063, 080, 100, 125, 160, 200, 250, 320	
Variants ø 32 ... 320 mm (magnetic piston)	**Substitute**
Standard	M
Special wiper/seal	W2
Low friction	X2
Piston rod bellow	MG
Without cushion	MW
Without cushion, low friction	X4
Double ended piston rod	JM
Double ended piston rod, special wiper/seal	W4
Four-positon cylinder	MT
Non-rotating piston rod (internal)	N2
Locking unit (passive)	L4
Locking unit (passive), special wiper/seal	L8
Extended piston rod	MU
A/8***/MU/****/*** **Extension (mm)**	
Extended piston rod, special wiper/seal	W6
A/8***/W6/****/*** **Extension (mm)**	

Strokes (mm)	Substitute
5 ... 2800	
Piston rod thread	**Substitute**
Male	None
Female	X
Variants ø 160 ... 320 mm (non-magnetic piston)	**Substitute**
Standard	None
Special wiper/seal	W1
Low friction	X1
Piston rod bellow	G
Without cushion	W
Without cushion, low friction	X3
Double ended piston rod	J
Double ended piston rod, special wiper/seal	W3
Four-position cylinder	IT
Extended piston rod	IU
A/8***/IU/****/*** **Extension (mm)**	
Extended piston rod	W5
A/8***/W5/****/*** **Extension (mm)**	

Note: If postion ist not required, disregard option position within part number e.g. RA/802100/M/100. For combinations of cylinder variants consult our technical service.

For example: Please note that heat resistant seals are not available for all variants. This option selector explains only the cylinder variants.
Additional variants/options are not possible.

Detail's see table on page 4.

Our policy is one of continued research and development. We therefore reserve the right to amend, without notice, the specifications given in this document. (2016 - 9159m) © 2024 Norgren GmbH

Cylinder with Profile barrel ø 32 ... 125 mm

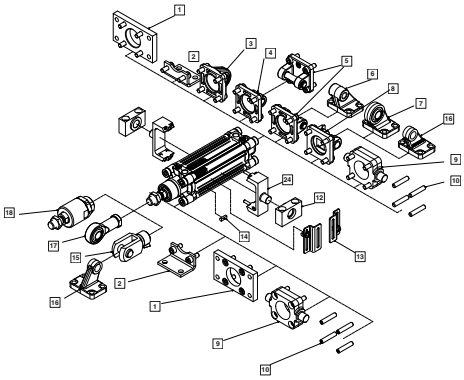

Cylinder with Round barrel ø 32 ... 320 mm

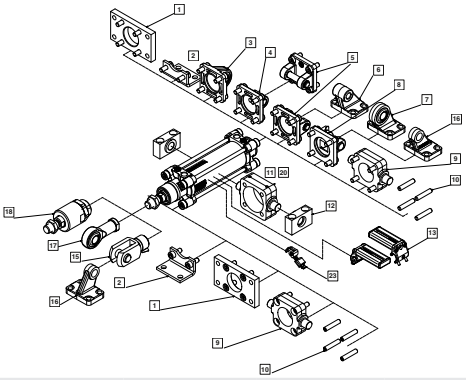

Mountings

Model	A	AK	B, G	C	D	D2	F	FH	H	UH
	10	18	1	2	5	8	15	9	11	20
ø	Page 16	Page 16	Page 16	Page 16	Page 17	Page 17	Page 17	Page 17	Page 18	Page 18
32	QM/8032/35	QM/8025/38	QA/8032/22	QA/8032/21	QA/8032/23	QA/8032/42	QM/8025/25	QA/8032/34	QA/8032/28	QA/8032/40
40	QM/8032/35	QM/8040/38	QA/8040/22	QA/8040/21	QA/8040/23	QA/8040/42	QM/8040/25	QA/8040/34	QA/8040/28	QA/8040/40
50	QM/8050/35	QM/8050/38	QA/8050/22	QA/8050/21	QA/8050/23	QA/8050/42	QM/8050/25	QA/8050/34	QA/8050/28	QA/8050/40
63	QM/8050/35	QM/8050/38	QA/8063/22	QA/8063/21	QA/8063/23	QA/8063/42	QM/8050/25	QA/8063/34	QA/8063/28	QA/8063/40
80	QM/8080/35	QM/8080/38	QA/8080/22	QA/8080/21	QA/8080/23	QA/8080/42	QM/8080/25	QA/8080/34	QA/8080/28	QA/8080/40
100	QM/8080/35	QM/8080/38	QA/8100/22	QA/8100/21	QA/8100/23	QA/8100/42	QM/8080/25	QA/8100/34	QA/8100/28	QA/8100/40
125	QM/8125/35	QM/8125/38	QM/8125/22	QM/8125/21	QM/8125/23	QA/8125/42	QM/8125/25	QA/8125/34	QM/8125/28	QA/8125/40
160	QM/8160/35	QM/8160/38	QM/8160/22	QM/8160/21	QM/8160/23	QA/8160/42	QM/8160/25	-	QM/8160/28	QA/8160/40
200	QM/8160/35	QM/8160/38	QM/8200/22	QM/8200/21	QM/8200/23	QA/8200/42	QM/8160/25	-	QM/8200/28	QA/8200/40
250	QM/8250/35	-	QM/8250/22	QM/8250/21	QM/8250/23	-	QM/8250/25	-	QM/8250/28	-
320	QM/8320/35	-	QM/8320/22	QM/8320/21	QM/8320/23	-	QM/8320/25	-	QM/8320/28	-

	UH	S	SW	UF	UR	R	SS	US	Groove key	Valve mounting kit
	24	12	6	17	3	4	16	7	14	13
ø	Page 18	Page 18	Page 19	Page 19	Page 19	Page 19	Page 20	Page 20	Page 20	Page 33 & 34
32	PQA/802032/40	QA/8032/41	M/P19493	QM/8025/32	QA/8032/33	QA/8032/27	M/P19931	M/P40310	M/P72816	More Details see page 33 & 34
40	PQA/802040/40	QA/8040/41	M/P19494	QM/8040/32	QA/8040/33	QA/8040/27	M/P19932	M/P40311	M/P72816	
50	PQA/802050/40	QA/8040/41	M/P19495	QM/8050/32	QA/8050/33	QA/8050/27	M/P19933	M/P40312	M/P72816	
63	PQA/802063/40	QA/8063/41	M/P19496	QM/8050/32	QA/8063/33	QA/8063/27	M/P19934	M/P40313	M/P72816	
80	PQA/802080/40	QA/8063/41	M/P19497	QM/8080/32	QA/8080/33	QA/8080/27	M/P19935	M/P40314	M/P72816	
100	PQA/802100/40	QA/8100/41	M/P19498	QM/8080/32	QA/8100/33	QA/8100/27	M/P19936	M/P40315	M/P72816	
125	PQA/802125/40	QA/8100/41	M/P19499	QM/8125/32	QM/8125/33	QM/8125/27	M/P19937	M/P71355	M/P72816	
160	-	QA/8160/41	M/P19679	QM/8160/32	QM/8160/33	QM/8160/27	M/P19938	M/P71356	-	
200	-	QA/8160/41	M/P19683	QM/8160/32	QM/8200/33	QM/8200/27	M/P19939	M/P71357	-	
250	-	-	M/P19446	QM/8250/32	QM/8250/33	-	-	-	-	
320	-	-	M/P19447	QM/8320/32	QM/8320/33	-	-	-	-	

Pos.	Style	Standard
1	B, G	Clear anodised aluminium
2	C	Coated steel (ø 32 ... 320 mm)
3	R	Die-cast aluminium (ø 32 ... 100 mm) Coated cast iron (ø 125 ... 200 mm
4	UR	Die-cast aluminium (ø 32 ... 100 mm) Coated cast iron (ø 125 ... 200 mm) Inner ring: steel, Outer ring: brass
5	D	Die-cast aluminium (ø 32 ... 125 mm) Coated cast iron (ø 160 ... 320 mm) Bolt: galvanized steel (martensitic) Circlip: galvanized steel
6	SW	Die-cast aluminium (ø 32 ... 100 mm) Coated cast iron (ø 125 ... 320 mm)
7	US	Coatet cast iron Inner ring: steel, Outer ring: brass
8	D2	Die-cast aluminium (Ø32 ... 100 mm) Painted cast iron (Ø160 ... 200 mm), Bolt: stainless steel (martensitic), Circlip: galvanized steel
9	FH	Coated cast iron
10	A	Galvanized steel
11	H	Coated cast iron
12	S	Clear anodised aluminium Bearing: brass
13	Mounting kit	Galvanized steel
14	Groove key	Steel
15	F	Galvanized steel, Bolt: galvanized steel, Circlip: Galvanized steel
16	SS	Coated cast iron
17	UF	Galvanized steel, Inner ring: steel, Outer ring: brass
18	AK	Galvanized steel
20	UH	Coated cast iron
24	UH	Anodised aluminium

Our policy is one of continued research and development. We therefore reserve the right to amend, without notice, the specifications given in this document. (2016 - 9159m) © 2024 Norgren GmbH

Guide blocks

ø	Guide blocks - plain bearings 19 Page 21	Guide blocks - roller bearings 19 Page 22	Guide blocks - plain bearings, long coupling 19 Page 24	Guide blocks - plain bearings, short coupling 19 Page 24
32	QA/8032/51/*	QA/8032/61/*	QA/8032/81/*	QA/8032/85/*
40	QA/8040/51/*	QA/8040/61/*	QA/8040/81/*	QA/8040/85/*
50	QA/8050/51/*	QA/8050/61/*	QA/8050/81/*	QA/8050/85/*
63	QA/8063/51/*	QA/8063/61/*	QA/8063/81/*	QA/8063/85/*
80	QA/8080/51/*	QA/8080/61/*	QA/8080/81/*	QA/8080/85/*
100	QA/8100/51/*	QA/8100/61/*	QA/8100/81/*	QA/8100/85/*

*) Insert standard stroke length: 50, 100, 160, 200, 250, 320, 400 and 500 mm, use the next bigger standard stroke.

Accessories for Profile (ø 32 ... 125 mm) & Round barrel (ø 32 ... 320 mm)

Model Profile barrel	Model Round barrel	ø	Port size	Banjo flow control	Straight fitting	Elbow fitting
PRA/802032/M/*	RA/802032/M/*	32	G1/8	C0K510618	C02250618	C02470618
PRA/802040/M/*	RA/802040/M/*	40	G1/4	C0K510628	C02250628	C02470628
PRA/802050/M/*	RA/802050/M/*	50	G1/4	C0K510828	C02250828	C02470828
PRA/802063/M/*	RA/802063/M/*	63	G3/8	C0K510838	C02250838	C02470838
PRA/802080/M/*	RA/802080/M/*	80	G3/8	C0K511038	C02251038	C02471038
PRA/802100/M/*	RA/802100/M/*	100	G1/2	C0K511248	C02251248	C02471248
PRA/802125/M/*	RA/802125/M/*	125	G1/2	C0K511248	C02251248	C02471248
-	RA/8160/M/*	160	G3/4	M840 (Inline)	-	-
-	RA/8200/M/*	200	G3/4	M840 (Inline)	-	-
-	RA/8250/M/*	250	G1	M855 (Inline)	-	-
-	RA/8320/M/*	320	G1	M855 (Inline)	-	-

For alternative fitting types please contact the technical service.

Magnetically operated switches

ø	M/50/** Page 26 ... 29	Groove cover Page 20	Switch mounting brackets for M/50 23 Page 27	TQM/31, QM/32, QM/132 Page 30	Switch mounting brackets for TQM/31, QM/32, QM/132 Page 31	QM/140 Page 32	Switch mounting brackets for QM/140 Page 33
32		M/P72725/1000	QM/27/2/1		QM/31/032/22		QM/140/010/22
40		M/P72725/1000	QM/27/2/1		QM/31/032/22		QM/140/010/22
50		M/P72725/1000	QM/27/2/1		QM/31/032/22		QM/140/010/22
63		M/P72725/1000	QM/27/2/1		QM/31/032/22		QM/140/010/22
80		M/P72725/1000	QM/27/2/1		QM/31/080/22		QM/140/010/22
100		M/P72725/1000	QM/27/2/1		QM/31/080/22		QM/140/010/22
125		M/P72725/1000	QM/27/2/1		QM/31/080/22		-
160		-	QM/27/2/1		QM/31/160/22		-
200		-	QM/27/2/1		QM/31/160/22		-
250		-	QM/27/2/2		QM/31/250/22		-
320		-	QM/27/2/3		QM/31/320/22		-

Our policy is one of continued research and development. We therefore reserve the right to amend, without notice, the specifications given in this document. (2016 - 9159m) © 2024 Norgren GmbH

Spares kit for profile and round barrel
(wearing parts to be replaced are: piston seals, barrel seals, damping seals and piston rod seals as well as the wear ring)

Spares kit						Option			
Piston rod thread	Male thread		. / M / IU / MU / W / MW / G / MG / L2 / L4	J / JM	W1 / W2 / W5 / W6 / L8	W3 / W4	N1 / N2	X1 / X2 / X3 / X4	IT / MT
	Female thread		MX / MUX / MWX / MGX / L4X	JMX	W2X / W6X / L8X	W4X	N2X	X2X / X4X	MTX
	Model	ø				Standard temperature (-20 °C / -10 °C ... +80 °C)			
Standard	PRA/802*** PSA/802*** PCA/802*** PDA/802*** RA/802*** SA/802*** CA/802*** DA/802***	032	QA/8032/00	QA/8032/J/00	QA/8032/W1/00	QA/8032/W3/00	QA/8032/N1/00	QA/8032/X1/00	2x QA/8032/00
		040	QA/8040/00	QA/8040/J/00	QA/8040/W1/00	QA/8040/W3/00	QA/8040/N1/00	QA/8040/X1/00	2x QA/8040/00
		050	QA/8050/00	QA/8050/J/00	QA/8050/W1/00	QA/8050/W3/00	QA/8050/N1/00	QA/8050/X1/00	2x QA/8050/00
		063	QA/8063/00	QA/8063/J/00	QA/8063/W1/00	QA/8063/W3/00	QA/8063/N1/00	QA/8063/X1/00	2x QA/8063/00
		080	QA/8080/00	QA/8080/J/00	QA/8080/W1/00	QA/8080/W3/00	QA/8080/N1/00	QA/8080/X1/00	2x QA/8080/00
		100	QA/8100/00	QA/8100/J/00	QA/8100/W1/00	QA/8100/W3/00	QA/8100/N1/00	QA/8100/X1/00	2x QA/8100/00
		125	QA/8125/00	QA/8125/J/00	QA/8125/W1/00	QA/8125/W3/00	-	QA/8125/X1/00	2x QA/8125/00
	RA/8*** SA/8*** CA/8*** DA/8***	160	QA/8160/00	QA/8160/J/00	QA/8160/W1/00	QA/8160/W3/00	-	QA/8160/X1/00	2x QA/8160/00
		200	QA/8200/00	QA/8200/J/00	QA/8200/W1/00	QA/8200/W3/00	-	QA/8200/X1/00	2x QA/8200/00
		250	QA/8250/00	QA/8250/J/00	-	-	-	-	2x QA/8250/00
		320	QA/8320/00	QA/8320/J/00	-	-	-	-	2x QA/8320/00
	Model	ø				High temperature (0 °C ... +150 °C)			
Special option	TPRA/802*** TPSA/802*** TPCA/802*** TPDA/802*** TRA/802*** TSA/802*** TCA/802*** TDA/802***	032	TQA/8032/00	TQA/8032/J/00	-	-	-	-	2x TQA/8032/00
		040	TQA/8040/00	TQA/8040/J/00	-	-	-	-	2x TQA/8040/00
		050	TQA/8050/00	TQA/8050/J/00	-	-	-	-	2x TQA/8050/00
		063	TQA/8063/00	TQA/8063/J/00	-	-	-	-	2x TQA/8063/00
		080	TQA/8080/00	TQA/8080/J/00	-	-	-	-	2x TQA/8080/00
		100	TQA/8100/00	TQA/8100/J/00	-	-	-	-	2x TQA/8100/00
		125	TQA/8125/00	TQA/8125/J/00	-	-	-	-	2x TQA/8125/00
	TRA/8*** TSA/8*** TCA/8*** TDA/8***	160	TQA/8160/00	TQA/8160/J/00	-	-	-	-	2x TQA/8160/00
		200	TQA/8200/00	TQA/8200/J/00	-	-	-	-	2x TQA/8200/00
		250	TQA/8250/00	TQA/8250/J/00	-	-	-	-	2x TQA/8250/00
		320	TQA/8320/00	TQA/8320/J/00	-	-	-	-	2x TQA/8320/00
	Model	ø				Low temperature (-40 °C ... +80 °C)			
	LPRA/802*** LPSA/802*** LPCA/802*** LPDA/802*** LRA/802*** LSA/802*** LCA/802*** LDA/802***	032	LQA/8032/00	LQA/8032/00	-	-	-	-	2x LQA/8032/00
		040	LQA/8040/00	LQA/8040/00	-	-	-	-	2x LQA/8040/00
		050	LQA/8050/00	LQA/8050/00	-	-	-	-	2x LQA/8050/00
		063	LQA/8063/00	LQA/8063/00	-	-	-	-	2x LQA/8063/00
		080	LQA/8080/00	LQA/8080/00	-	-	-	-	2x LQA/8080/00
		100	LQA/8100/00	LQA/8100/00	-	-	-	-	2x LQA/8100/00
		125	LQA/8125/00	LQA/8125/00	-	-	-	-	2x LQA/8125/00
	LRA/8*** LSA/8*** LCA/8*** LDA/8***	160	LQA/8160/00	LQA/8160/00	-	-	-	-	2x LQA/8160/00
		200	LQA/8200/00	LQA/8200/00	-	-	-	-	2x LQA/8200/00
		250	LQA/8250/00	LQA/8250/00	-	-	-	-	2x LQA/8250/00
		320	LQA/8320/00	LQA/8320/00	-	-	-	-	2x LQA/8320/00
	Model	ø				Hydraulic			
	HPRA/802*** HPSA/802*** HPCA/802*** HPDA/802*** HRA/802*** HSA/802*** HCA/802*** HDA/802***	032	HQA/8032/00	2x HQA/8032/00	-	-	-	-	2x HQA/8032/00
		040	HQA/8040/00	2x HQA/8040/00	-	-	-	-	2x HQA/8040/00
		050	HQA/8050/00	2x HQA/8050/00	-	-	-	-	2x HQA/8050/00
		063	HQA/8063/00	2x HQA/8063/00	-	-	-	-	2x HQA/8063/00
		080	HQA/8080/00	2x HQA/8080/00	-	-	-	-	2x HQA/8080/00
		100	HQA/8100/00	2x HQA/8100/00	-	-	-	-	2x HQA/8100/00

*** = add cylinder diamter

Our policy is one of continued research and development. We therefore reserve the right to amend, without notice, the specifications given in this document. (2016 - 9159m) © 2024 Norgren GmbH

Basic dimensions
PRA/802000/M, RA/802000/M, RA/8000, RA/8000/M
Standard Cylinder
ø 32 ... 125 mm

Dimensions in mm
Projection/First angle

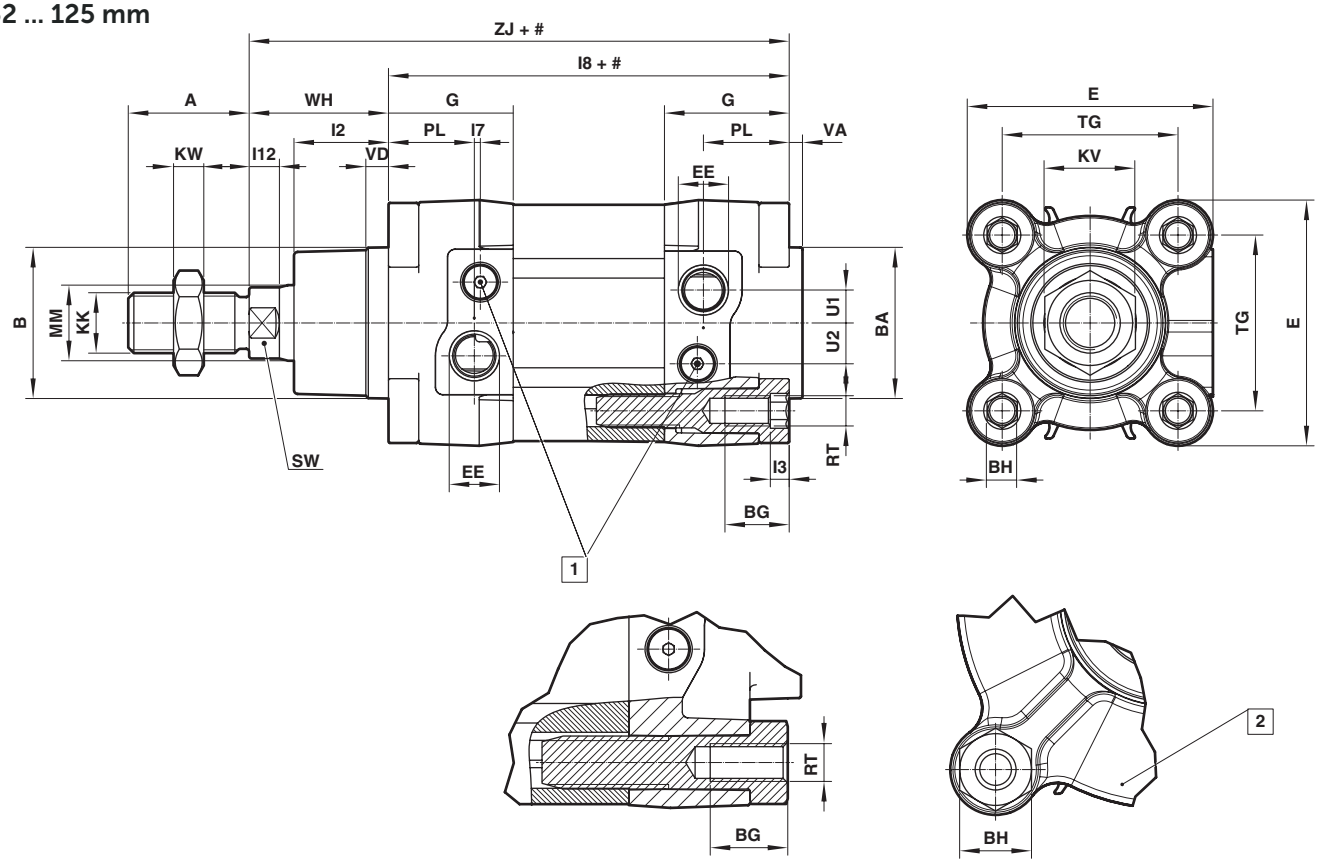

Our policy is one of continued research and development. We therefore reserve the right to amend, without notice, the specifications given in this document. (2016 - 9159m) © 2024 Norgren GmbH

Basic dimensions
PRA/802000/M, RA/802000/M, RA/8000, RA/8000/M
Standard Cylinder
ø 160 ... 320 mm

Dimensions in mm
Projection/First angle

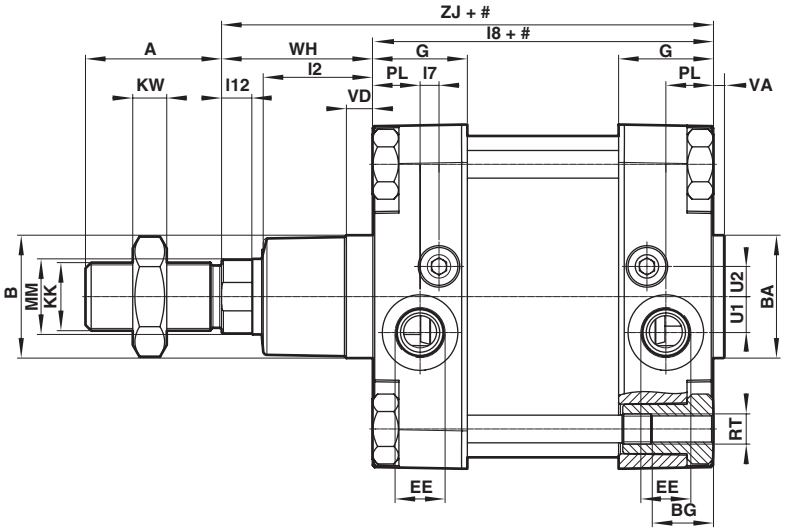

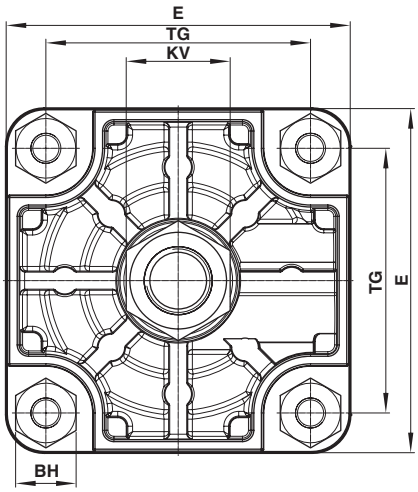

Model Profile barrel
ø 32 ... 125 mm

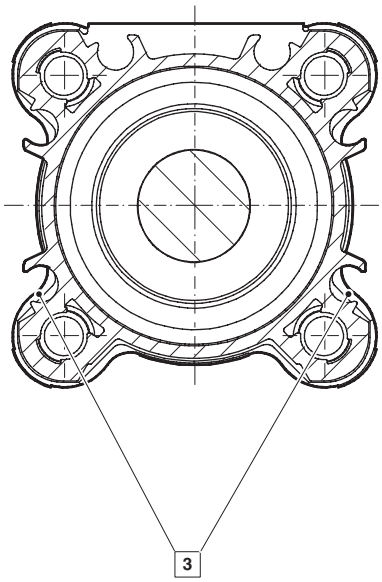

Model Round barrel
ø 32 ... 125 mm

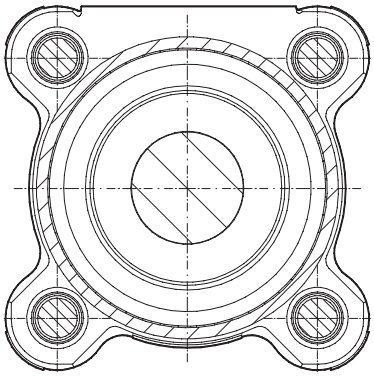

Model Round barrel
ø 160 ... 320 mm

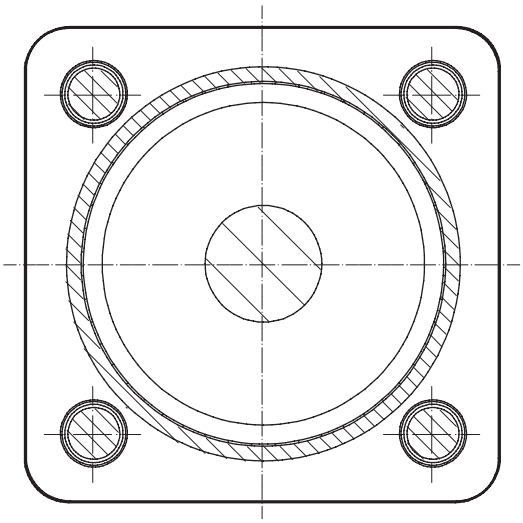

Stroke
$ Piston rod extension
1 Cushion screw
2 ø 80 ... 320 mm
3 M/50 switches can be mounted flush with the profile

For additional information please contact the technical service or http://www.norgren.com

Our policy is one of continued research and development. We therefore reserve the right to amend, without notice, the specifications given in this document. (2016 - 9159m) © 2024 Norgren GmbH

ø	A -0,5	ø B d11	ø BA d11	BG min	BH	□ E	EE	G	KK	KV	KW	L2	L3	L7	L8	L12	ø MM h9	PL	TG
32	22	30	30	16	6	47	G1/8	29	M10 x 1,25	17	5	19,5	4	6,6	94	5,5	12	15	32,5
40	24	35	35	16	6	53	G1/4	34,5	M12 x 1,25	19	6	22	4	5,6	105	6,5	16	21,5	38
50	32	40	40	16	8	65	G1/4	33	M16 x 1,5	24	8	25	5	1,6	106	8	20	22,7	46,5
63	32	45	45	16	8	75	G3/8	36,5	M16 x 1,5	24	8	25	5	3,6	121	8	20	24,2	56,5
80	40	45	45	17	19	95	G3/8	42	M20 x 1,5	30	10	33	-	1,8	128	10	25	29,7	72
100	40	55	55	17	19	113	G1/2	42	M20 x 1,5	30	10	35	-	3,8	138	10	25	27,7	89
125	54	60	60	20	24	140	G1/2	54	M27 x 2	41	13,5	44	-	1,8	160	13	32	39,7	110
160	72	65	65	28,5	32	183,5	G3/4	50	M36 x 2	55	18	58	-	10	180	16	40	25	140
200	72	75	75	28,5	32	224	G3/4	50	M36 x 2	55	18	67	-	10	180	16	40	26	175
250	84	90	90	35	36	280	G1	58	M42 x 2	65	21	80	-	4,5	200	20	50	28	220
320	96	110	110	30	46	350	G1	60	M48 x 2	75	24	90	-	4,5	220	24	63	31	270

ø	RT	SW	U1	U2	VA	VD	WH	ZJ	Model Profile barrel	at 0 mm	per 25 mm	Model Round barrel	at 0 mm	per 25 mm
32	M 6	10	4,6	6,3	3,5	6	26	120	PRA/802032/M/*	0,49 (kg)	0,06 (kg)	RA/802032/M/*	0,46 (kg)	0,06 (kg)
40	M 6	13	5,8	9,2	3,5	6	30	135	PRA/802040/M/*	0,69 (kg)	0,08 (kg)	RA/802040/M/*	0,65 (kg)	0,08 (kg)
50	M 8	17	8,7	10,8	3,5	6	37	143	PRA/802050/M/*	1,09 (kg)	0,12 (kg)	RA/802050/M/*	1,02 (kg)	0,12 (kg)
63	M 8	17	10	12,8	3,5	6	37	158	PRA/802063/M/*	1,54 (kg)	0,13 (kg)	RA/802063/M/*	1,46 (kg)	0,14 (kg)
80	M 10	22	12	14,5	3,5	6	46	174	PRA/802080/M/*	2,64 (kg)	0,20 (kg)	RA/802080/M/*	2,54 (kg)	0,21 (kg)
100	M 10	22	9	14,5	3,5	6	51	189	PRA/802100/M/*	3,66 (kg)	0,23 (kg)	RA/802100/M/*	3,50 (kg)	0,23 (kg)
125	M 12	27	12	17	5,5	8	65	225	PRA/802125/M/*	6,16 (kg)	0,45 (kg)	RA/802125/M/*	5,92 (kg)	0,34 (kg)
160	M 16	36	19	16	4	15	80	260	-	-	-	RA/8160/M/*	14,9 (kg)	0,55 (kg)
200	M 16	36	19	16	5	15	95	275	-	-	-	RA/8200/M/*	21,7 (kg)	0,60 (kg)
250	M 20	41	22	30	7	13	105	305	-	-	-	RA/8250/M/*	32,6 (kg)	0,92 (kg)
320	M 24	55	22	30	7	13	120	340	-	-	-	RA/8320/M/*	59,8 (kg)	1,46 (kg)

* Please insert stroke length.
Basic Dimension are also for cylinder variants or for different piston rod material
LPRA/802000/M, LRA/802000/M, LRA/8000/M - Low Temperature Cylinder
TPRA/802000/M, TRA/802000/M, TRA/8000/M - High Temperature Cylinder
HPRA/802000/M, HRA/802000/M, - Hydraulic Cylinder
PRA/802000/W2, RA/802000/W2 - Cylinder with Special Wiper - Seal
PRA/802000/X2, RA/802000/X2, RA/8000/X2 - Low Friction Cylinder
PRA/802000/MU, RA/802000/MU, RA/8000/MU - Cylinder with Extended Piston Rod
PRA/802000/W6, RA/802000/W6 - Cylinder with Extended Piston Rod and Special Wiper - Seal
PRA/802000/MW, RA/802000/MW, RA/8000/MW - Cylinder without Cushioning
PRA/802000/X4, RA/802000/X4, RA/8000/X4 - Low Friction Cylinder without Cushioning
RA/8000/W1 - Cylinder with Special Wiper - Seal without Magnet
RA/8000/X1 - Low Friction Cylinder without Magnet
RA/8000/IU - Cylinder with Extended Piston Rod without Magnet
RA/8000/W5 - Cylinder with Extended Piston Rod and Special Wiper - Seal without Magnet
RA/8000/W - Cylinder without Cushioning without Magnet
RA/8000/X3 - Low Friction Cylinder without Cushioning without Magnet

Our policy is one of continued research and development. We therefore reserve the right to amend, without notice, the specifications given in this document. (2016 - 9159m) © 2024 Norgren GmbH

Cylinder variants
..../802000/MX; /MUX; /MWX; /W2X; /W6X; /X2X; X4X
Cylinder with Female Piston Rod Thread

Dimensions in mm
Projection/First angle

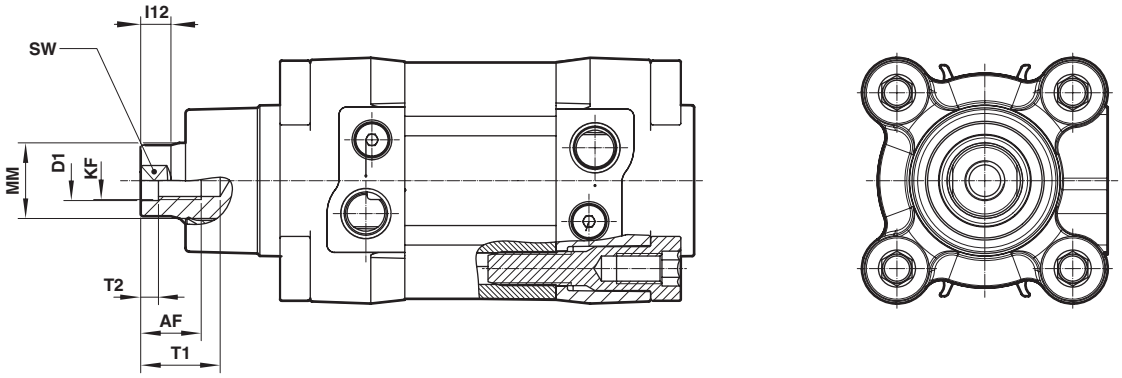

ø	AF	ø D1	KF	l12	ø MM h9	SW	T1	T2
32	12	6,4	M6	5,5	12	10	16	2,6
40	12	8,4	M8	6,5	16	13	16	3,3
50	16	10,5	M10	8	20	17	21	4,7
63	16	10,5	M10	8	20	17	21	4,7
80	20	13	M12	10	25	22	25	6,1
100	20	13	M12	10	25	22	25	6,1
125	32	17	M16	13	32	27	38	8

For missing dimensions please see page 9, 10 and 11

Cylinder variants
PRA/802000/N2, RA/802000/N2 – Cylinder with Non-Rotating Piston Rod
PRA/802000/N2X, RA/802000/N2X – Cylinder with Non-Rotating Piston Rod and Female Piston Rod Thread

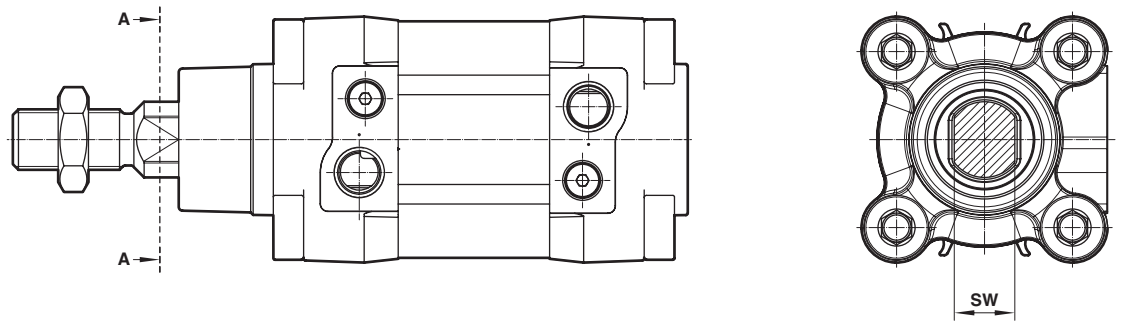

ø	SW	max. Torque (Nm)	Model Profile barrel	Model Round barrel
32	10	0,5	PRA/802032/N2/*	RA/802032/N2/*
40	13	1	PRA/802040/N2/*	RA/802040/N2/*
50	16	1,5	PRA/802050/N2/*	RA/802050/N2/*
63	16	1,5	PRA/802063/N2/*	RA/802063/N2/*
80	21	2,5	PRA/802080/N2/*	RA/802080/N2/*
100	21	2,5	PRA/802100/N2/*	RA/802100/N2/*

* Please insert stroke length; Maximum stroke: 1000 mm; For missing dimensions please see page 9, 10 and 11

Our policy is one of continued research and development. We therefore reserve the right to amend, without notice, the specifications given in this document. (2016 - 9159m) © 2024 Norgren GmbH

Cylinder variants
PRA/802000/JM, RA/802000/JM, RA/8000/JM, RA/8000/J, PRA/802000/W4, RA/802000/W4, RA/802000/W3 – Cylinder with Double Ended Piston Rod
PRA/802000/JMX, RA/802000/JMX, PRA/802000/W4X, RA/802000/W4X – Cylinder with Double Ended Piston Rod and Female Piston Rod Thread

Dimensions in mm
Projection/First angle

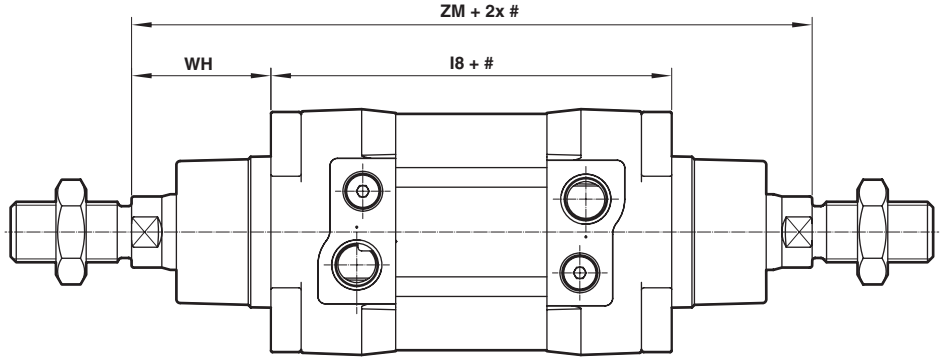

Stroke

ø	L8	WH	ZM	Model Profile barrel	Model Round barrel
32	94	26	146	PRA/802032/JM/*	RA/802032/JM/*
40	105	30	165	PRA/802040/JM/*	RA/802040/JM/*
50	106	37	180	PRA/802050/JM/*	RA/802050/JM/*
63	121	37	195	PRA/802063/JM/*	RA/802063/JM/*
80	128	46	220	PRA/802080/JM/*	RA/802080/JM/*
100	138	51	240	PRA/802100/JM/*	RA/802100/JM/*
125	160	65	290	PRA/802125/JM/*	RA/802125/JM/*
160	180	80	340	-	RA/8160/JM/*
200	180	95	370	-	RA/8200/JM/*
250	200	105	410	-	RA/8250/JM/*
320	220	120	460	-	RA/8320/JM/*

* Please insert stroke length; For missing dimensions please see page 9, 10 and 11

Cylinder variants
PRA/802000/MT, RA/802000/MT, RA/8000/MT, RA/8000/IT – Four Position Cylinder
PRA/802000/MTX, RA/802000/MTX – Four Position Cylinder and Female Piston Rod Thread

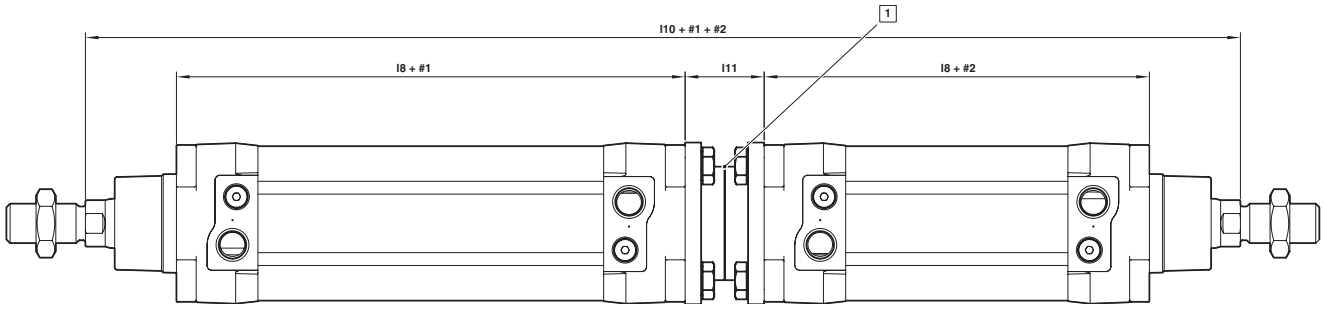

Stroke

ø	l8	l10	l11	Type Mounting kit	Model Profile barrel	Model Round barrel
32	94	267	27	QA/802032/55	PRA/802032/MT/*/**	RA/802032/MT/*/**
40	105	297	27	QA/802040/55	PRA/802040/MT/*/**	RA/802040/MT/*/**
50	106	318	32	QA/802050/55	PRA/802050/MT/*/**	RA/802050/MT/*/**
63	121	344	28	QA/802063/55	PRA/802063/MT/*/**	RA/802063/MT/*/**
80	128	386	38	QA/802080/55	PRA/802080/MT/*/**	RA/802080/MT/*/**
100	138	416	38	QA/802100/55	PRA/802100/MT/*/**	RA/802100/MT/*/**
125	160	494	44	QA/802125/55	PRA/802125/MT/*/**	RA/802125/MT/*/**
160	180	532	12		-	RA/8160/MT/*/**
200	180	560	10		-	RA/8200/MT/*/**

* Please insert stroke length 1; ** Please insert stroke length 2
Maximum stroke = stroke 1 + stroke 2: ø 32 = 700 mm, ø 40 = 1000 mm, ø 50 = 1000 mm, ø 63 = 900 mm, ø 80 = 1200 mm, ø 100 = 1100 mm, ø 125 = 1200 mm, ø 160 = 1200 mm, ø 200 = 1100 mm; For missing dimensions please see page 9, 10 and 11
1 Mounting kit to connecting two standard cylinder to build four position cylinder

Our policy is one of continued research and development. We therefore reserve the right to amend, without notice, the specifications given in this document. (2016 - 9159m) © 2024 Norgren GmbH

Cylinder variants

Dimensions in mm
Projection/First angle

PRA/802000/MG, RA/802000/MG, RA/8000/MG, RA/8000/G – Cylinder with Piston Rod Bellows
PRA/802000/MGX, RA/802000/MGX – Cylinder with Piston Rod Bellows and Female Piston Rod Thread

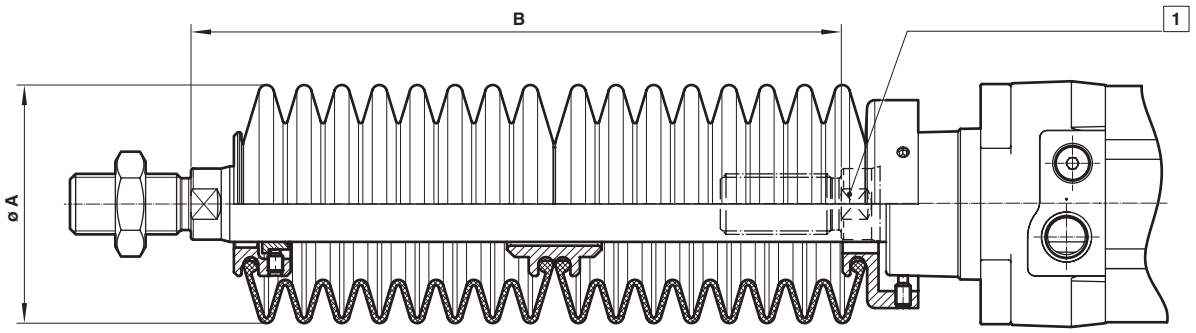

1 Piston rod without bellows

ø	ø A	Max. stroke per bellow	Piston rod extention B for first bellow	for further bellows	Model Profile barrel	Model Round barrel
32	40	60	30	25	PRA/802032/MG/*	RA/802032/MG/*
40	63	145	50	32	PRA/802040/MG/*	RA/802040/MG/*
50	63	145	40	32	PRA/802050/MG/*	RA/802050/MG/*
63	63	145	40	32	PRA/802063/MG/*	RA/802063/MG/*
80	80	250	50	45	PRA/802080/MG/*	RA/802080/MG/*
100	80	250	50	45	PRA/802100/MG/*	RA/802100/MG/*
125	80	250	50	45	PRA/802125/MG/*	RA/802125/MG/*
160	116	350	70	60	-	RA/8160/MG/*
200	116	350	70	60	-	RA/8200/MG/*
250	116	350	70	60	-	RA/8250/MG/*
320	143	500	110	100	-	RA/8320/MG/*

* Please insert stroke length; Maximum stroke: ø 32 = 1860 mm, ø 40 ... 320 = 2000 mm
For missing dimensions please see page 9, 10 and 11

Our policy is one of continued research and development. We therefore reserve the right to amend, without notice, the specifications given in this document. (2016 - 9159m) © 2024 Norgren GmbH

Cylinder variants

Dimensions in mm
Projection/First angle

PRA/802000/L4, RA/802000/L4 – Cylinder with Locking unit (Passive)
PRA/802000/L4X, RA/802000/L4X – Cylinder with Locking unit (Passive) and Female Piston Rod Thread
PRA/802000/L8, RA/802000/L8 – Cylinder with Locking unit (Passive) and Special Wiper Seal
PRA/802000/L8X, RA/802000/L8X – Cylinder with Locking unit (Passive) and Special Wiper Seal and Female Piston Rod Thread

Spring force on removal of the signal to the unit.
Operating pressure for locking unit: 4 ... 10 bar

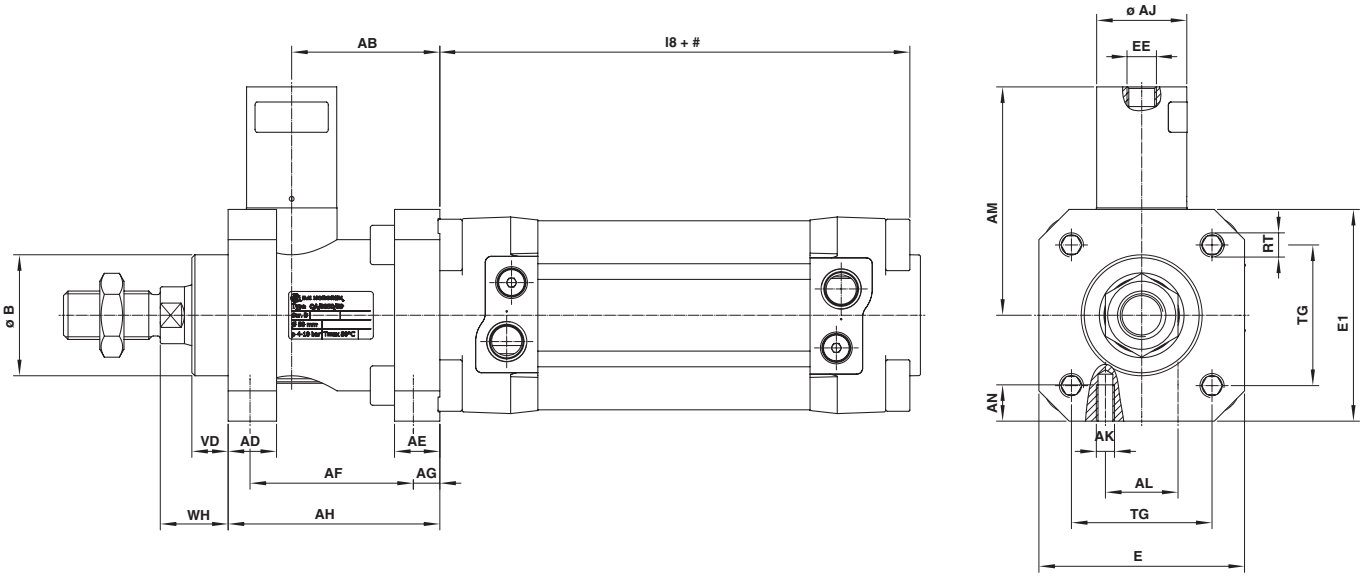

Stroke

ø	AB	AD	AE	AF	AG	AH	ø AJ	AK	AL	AM	AN	ø B e11	E	E1	EE
32	32	12	8	40	4,2	48	25	M 5	16	59	8	30	48	50	G1/8
40	35,5	12	10	46	4,5	55	24	M 5	21	61,5	10	35	56	58	G1/8
50	49	16	15	54	11,5	70	30	M 6	24	75,5	12	40	68	70	G1/8
63	49	15	15	55	7,5	70	38	M 8	32	86	12	45	82	85	G1/8
80	62	16	16	70	10	90	53	M 8	44	118	16	45	100	105	G1/8
100	65	18	16	70	10	92	53	M 8	60	118	16	55	120	130	G1/8
125	85	27	25	95	11	122	65	M 10	75	140	20	60	140	150	G1/8

ø	L8	RT	TG	VD	WH	Locking force	Spare part Locking unit *1)	Spare part Cartridge	Model Profile barrel	Model Round barrel
32	94	M6	32,5	10	16	600	QA/8032/59	QA/8032/63	PRA/802032/L4/*	RA/802032/L4/*
40	105	M6	38	10	18	1000	QA/8040/59	QA/8040/63	PRA/802040/L4/*	RA/802040/L4/*
50	106	M8	46,5	12	22	1500	QA/8050/59	QA/8050/63	PRA/802050/L4/*	RA/802050/L4/*
63	121	M8	56,5	12	20	2200	QA/8063/59	QA/8063/63	PRA/802063/L4/*	RA/802063/L4/*
80	128	M10	72	20	33	5000	QA/8080/59	QA/8100/63	PRA/802080/L4/*	RA/802080/L4/*
100	138	M10	89	23	38	5000	QA/8100/59	QA/8100/63	PRA/802100/L4/*	RA/802100/L4/*
125	160	M12	110	32	65	7000	QA/8125/59	QA/8125/63	PRA/802125/L4/*	RA/802125/L4/*

* Please insert stroke length
Maximum stroke: 2600 mm
*1) with Cartridge
For missing dimensions please see page 9, 10 and 11

Our policy is one of continued research and development. We therefore reserve the right to amend, without notice, the specifications given in this document. (2016 - 9159m) © 2024 Norgren GmbH

Mountings
Front or rear stud mounting A

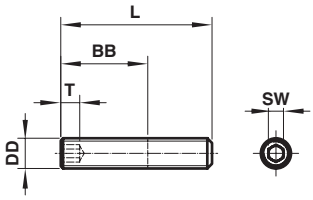

ø	BB	DD	L	SW	T (min)	(kg)	Model (A)
32/40	17	M6	30	3	3,5	0,02	QM/8032/35
50/63	23	M8	40	4	5	0,05	QM/8050/35
80/100	28	M10	45	5	6	0,08	QM/8080/35
125	34	M12	60	6	8	0,14	QM/8125/35
160/200	42	M16	70	8	10	0,31	QM/8160/35
250	50	M20	80	10	12	0,92	QM/8250/35
320	60	M24	90	12	15	1,46	QM/8320/35

Piston rod swivel
AK

Dimensions in mm
Projection/First angle

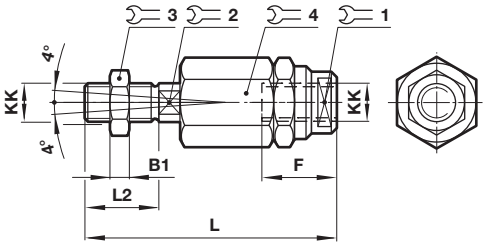

ø	KK	B1	F	L	L2	1	2	3	4	(kg)	Model (AK)
32	M10 x 1,25	5	26	73	20	19	12	17	30	0,20	QM/8025/38
40	M12 x 1,25	6	26	77	24	19	12	19	30	0,20	QM/8040/38
50/63	M16 x 1,5	8	34	106	32	30	19	24	42	0,65	QM/8050/38
80/100	M20 x 1,5	10	42	122	40	30	19	30	42	0,72	QM/8080/38
125	M27 x 2	13,5	40	147	54	40	24	41	55	1,70	QM/8125/38
160/200	M36 x 2	18	78	251	72	50	36	55	75	5,4	QM/8160/38

Head flange G,
Rear flange B
Conforms to ISO 15552,
type MF1 and MF2

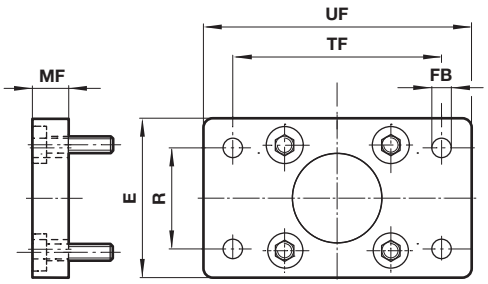

ø	E	ø FB	MF	R	TF	UF	(kg)	Model (B, G)
32	50	7	10	32	64	80	0,10	QA/8032/22
40	55	9	10	36	72	90	0,12	QA/8040/22
50	65	9	12	45	90	110	0,21	QA/8050/22
63	75	9	12	50	100	125	0,27	QA/8063/22
80	100	12	16	63	126	154	0,63	QA/8080/22
100	120	14	16	75	150	186	0,89	QA/8100/22
125	140	16	20	90	180	224	1,59	QM/8125/22
160	180	18	20	115	230	280	2,65	QM/8160/22
200	220	22	25	135	270	320	4,47	QM/8200/22
250	280	26	25	165	330	395	7,09	QM/8250/22
320	350	33	30	200	400	475	12,84	QM/8320/22

Foot mounting C
Conforms to ISO 15552, type MS1

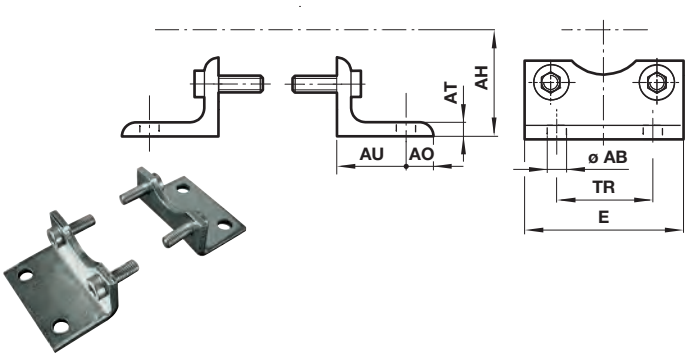

ø	ø AB	AH	AO	AT	AU	E	TR	(kg)	Model (C)
32	7	32	8	4	24	48	32	0,15	QA/8032/21
40	10	36	9	4	28	53	36	0,18	QA/8040/21
50	10	45	10	5	32	64	45	0,30	QA/8050/21
63	10	50	12	5	32	74	50	0,39	QA/8063/21
80	12	63	19	6	41	98	63	0,80	QA/8080/21
100	14,5	71	19	6	41	115	75	0,95	QA/8100/21
125	16,5	90	25	8	45	140	90	2,48	QM/8125/21
160	18,5	115	20	10	60	180	115	4,42	QM/8160/21
200	24	135	30	12	70	220	135	7,9	QM/8200/21
250	28	165	35	10	75	280	165	9,5	QM/8250/21
320	35	200	45	16	85	350	200	22	QM/8320/21

Our policy is one of continued research and development. We therefore reserve the right to amend, without notice, the specifications given in this document. (2016 - 9159m) © 2024 Norgren GmbH

Rear clevis D
Conforms to ISO 15552, type MP2

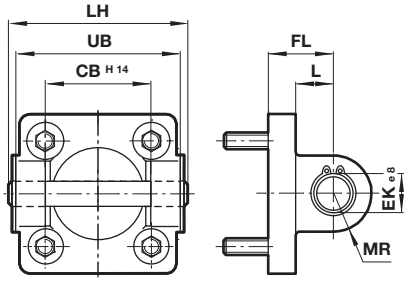

ø	CB H14	ø EK e8	FL	L	LH	MR	UB	(kg)	Model (D)
32	26	10	22	13	52	9	45	0,11	QA/8032/23
40	28	12	25	16	60	12	52	0,16	QA/8040/23
50	32	12	27	17	68	12	60	0,22	QA/8050/23
63	40	16	32	22	79	15	70	0,34	QA/8063/23
80	50	16	36	22	99	15	90	0,54	QA/8080/23
100	60	20	41	27	119	20	110	0,90	QA/8100/23
125	70	25	50	29	140	25	130	2,70	QM/8125/23
160	90	30	55	37	182	30	170	4,3	QM/8160/23
200	90	30	60	40	182	30	170	6,1	QM/8200/23
250	110	40	70	47	218	40	200	19	QM/8250/23
320	120	45	80	50	238	45	220	30,5	QM/8320/23

Rear clevis D2
Conforms to ISO 15552, type AB6

Dimensions in mm
Projection/First angle

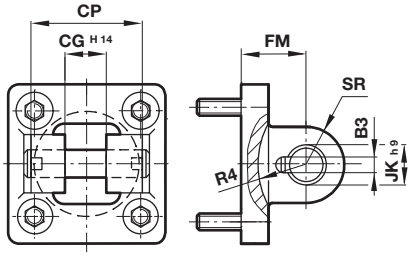

ø	CG H14	CP	B3	ø JK h9	FM	SR	R4	(kg)	Model (D2)
32	14	34	3,3	10	22	11	17	0,20	QA/8032/42
40	16	40	4,3	12	25	12	20	0,23	QA/8040/42
50	21	45	4,3	16	27	14,5	22	0,36	QA/8050/42
63	21	51	4,3	16	32	18	25	0,55	QA/8063/42
80	25	65	4,3	20	36	22	30	0,90	QA/8080/42
100	25	75	4,3	20	41	22	32	1,45	QA/8100/42
125	37	97	6,3	30	50	30	42	2,7	QA/8125/42
160	43	122	6,3	35	55	36	46	4,3	QA/8160/42
200	43	122	6,3	35	60	38	49	6,1	QA/8200/42

Piston rod clevis F
Conforms to DIN ISO 8140

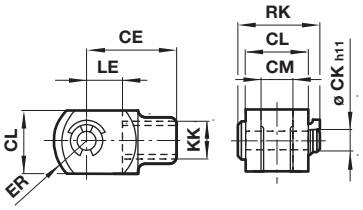

ø	KK	CE	ø CK h11	CL	CM	ER	LE	RK	(kg)	Model (F)
32	M10 x 1,25	40	10	20	10	16	20	27,5	0,09	QM/8025/25
40	M12 x 1,25	48	12	24	12	19	24	33,5	0,13	QM/8040/25
50/63	M16 x 1,5	64	16	32	16	25	32	42	0,33	QM/8050/25
80/100	M20 x 1,5	80	20	40	20	32	40	51	0,67	QM/8080/25
125	M27 x 2	110	30	55	30	45	54	73,5	1,35	QM/8125/25
160/200	M36 x 2	144	35	70	35	57	72	94	3	QM/8160/25
250	M42 x 2	168	40	85	40	77	84	107	6,4	QM/8250/25
320	M48 x 2	192	50	96	50	88	96	123	8,7	QM/8320/25

Front or rear detachable trunnion FH
Conforms to VDMA 24562 part 2, type MT 5/6

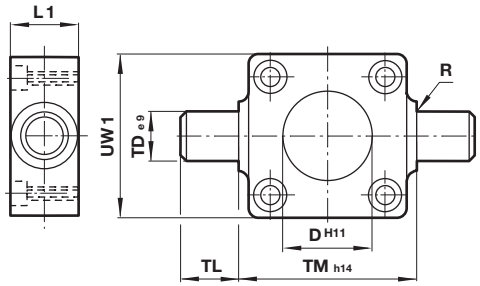

ø	ø D H11	L1	R	ø TD e9	TL	TM h14	UW1	(kg)	Model (FH)
32	30	16	1	12	12	50	45	0,20	QA/8032/34
40	35	20	1,6	16	16	63	55	0,38	QA/8040/34
50	40	24	1,6	16	16	75	65	0,60	QA/8050/34
63	45	24	1,6	20	20	90	75	1,10	QA/8063/34
80	45	28	1,6	20	20	110	100	1,90	QA/8080/34
100	55	38	2	25	25	132	120	3,50	QA/8100/34
125	60	50	2	25	25	160	145	6,50	QA/8125/34

Our policy is one of continued research and development. We therefore reserve the right to amend, without notice, the specifications given in this document. (2016 - 9159m) © 2024 Norgren GmbH

Centre trunnion – H
Conforms to ISO 15552, type MT4
Used for cylinder model with round barrel

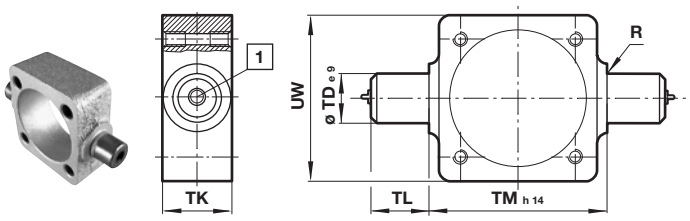

1 Grease nipple from ø 125 mm to ø 320 mm

ø	R max.	ø TD e9	TK	TL	TM h14	UW	XV min.	XV max. + #	(kg)	Model (H)
32	1	12	20	12	50	50	65	81	0,16	QA/8032/28
40	1,6	16	24	16	63	58	76,5	88,5	0,35	QA/8040/28
50	1,6	16	28	16	75	70	84	96	0,65	QA/8050/28
63	1,6	20	28	20	90	80	87,5	107,5	0,85	QA/8063/28
80	1,6	20	28	20	110	100	102	118	1,2	QA/8080/28
100	2	25	38	25	132	126	112	128	2,3	QA/8100/28
125	2	25	50	25	160	152	144	146	3,3	QM/8125/28
160	2,5	32	50	32	200	192	155	185	5,3	QM/8160/28
200	2,5	32	50	32	250	240	170	200	9,4	QM/8200/28
250	3,2	40	60	40	320	318	193	217	18	QM/8250/28
320	3,2	50	70	50	400	400	215	245	30	QM/8320/28

Note: Style 'H': These mountings are only supplied assembled complete with the cylinder. Unless otherwise specified, units will be supplied with dimension 'XV min'. plus half the stroke length. 'XV' = Distance from the piston rod s houlder to the centre of the mounting (Please see drawing).
Not for use on profile options.
This item is suited to all loads including heavy duty loads.
This item is for replacement only
H mounting must be initially ordered with the cylinder.

Adjustable trunnion mounting UH
Conforms to ISO 15552, type MT4
Used for cylinder model with round barrel

Dimensions in mm
Projection/First angle

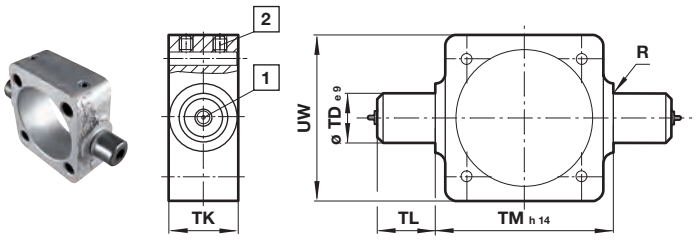

1 Grease nipple from ø 125 mm to ø 200 mm
2 Locking screws
Torque max: ø 32 & 40 mm = 6 Nm; ø 50 & 63 mm = 10 Nm;
ø 80 & 100 mm = 15 Nm; ø 125 mm = 25 Nm; ø 160 & 200 mm = 40 Nm

ø	R max.	ø TD e9	TK	TL	TM h14	UW	XV min.	XV max. + #	(kg)	Model (UH)
32	1	12	20	12	50	50	65	81	0,16	QA/8032/40
40	1,6	16	24	16	63	58	76,5	88,5	0,35	QA/8040/40
50	1,6	16	28	16	75	70	84	96	0,65	QA/8050/40
63	1,6	20	28	20	90	80	87,5	107,5	0,85	QA/8063/40
80	1,6	20	28	20	110	100	102	118	1,2	QA/8080/40
100	2	25	38	25	132	126	112	128	2,3	QA/8100/40
125	2	25	50	25	160	152	144	146	3,3	QA/8125/40
160	2,5	32	50	32	200	192	155	185	5,3	QA/8160/40
200	2,5	32	50	32	250	240	170	200	9,4	QA/8200/40

Style 'UH': It is most important that the locking screws which secure the mounting to the tie rod are tightened to the torque figures shown in the table below. For maximum energy input, consult our Technical Service.
Unless otherwise specified, units will be supplied with dimension 'XV min' plus half the stroke length. 'XV' = Distance from the piston rod shoulder to the centre of the mounting (Please see drawing).Not for use on profile options.This item is adjustable and suited to normal loads.

Adjustable trunnion mounting UH
Conforms to ISO 15552, type MT4
Used for cylinder model with profile barrel

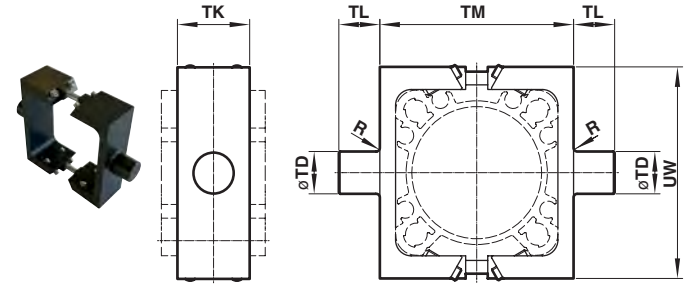

ø	R	ø TD e9	TK max.	TL h14	TM h14	UW	XV min.	XV max. + #	(kg)	Torque (Nm)	Model (UH)
32	1	12	25	12	50	58	67,5	78,5	0,06	1,3	PQA/802032/40
40	1,6	16	28	16	63	65	78,5	86,5	0,11	1,3	PQA/802040/40
50	1,6	16	28	16	75	80	84	96	0,16	4	PQA/802050/40
63	1,6	20	36	20	90	96	91,5	103,5	0,32	4	PQA/802063/40
80	1,6	20	36	20	110	116	106	114	0,37	6,5	PQA/802080/40
100	2	25	48	25	132	140	117	123	0,72	6,5	PQA/802100/40
125	2	25	50	25	160	163	144	146	0,96	14	PQA/802125/40

Style 'UH': It is most important that the locking screws which secure the mounting to the tie rod are tightened to the torque figures shown in the table below. For maximum energy input, consult our Technical Service.

Unless otherwise specified, units will be supplied with dimension 'XV min'. plus half the stroke length. 'XV' = Distance from the piston rod shoulder to the centre of the mounting (Please see drawing).

This item is adjustable and suited to normal loads.

#
Stroke

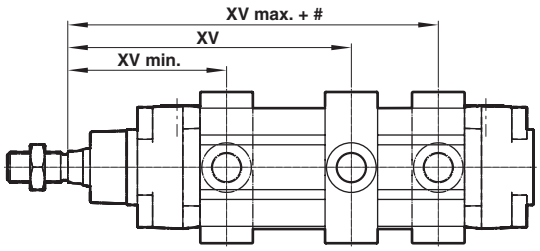

Trunnion support S
Conforms to ISO 15552, type AT4

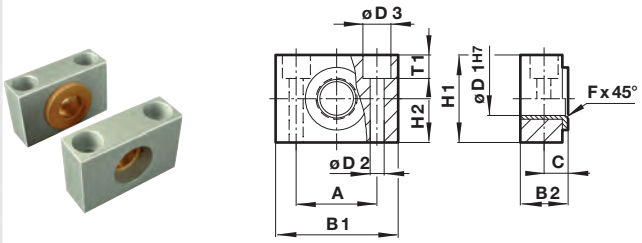

ø	A	B 1	B 2	C	ø D1 H7	ø D2	ø D3	F x 45°	H 1	H 2	T1	(kg)	Model (S)
32	32	46	18	10,5	12	6,6	11	1	30	15	6,8	0,10	QA/8032/41
40/50	36	55	21	12	16	9	15	1,6	36	18	9	0,14	QA/8040/41
63/80	42	65	23	13	20	11	18	1,6	40	20	11	0,18	QA/8063/41
100/125	50	75	28,5	16,5	25	14	20	2	50	25	13	0,34	QA/8100/41
160/200	60	92	39	21,5	32	18	26	2,5	60	30	15,5	1,9	QA/8160/41

Our policy is one of continued research and development. We therefore reserve the right to amend, without notice, the specifications given in this document. (2016 - 9159m) © 2024 Norgren GmbH

Universal piston rod eye UF
Conforms to DIN ISO 8139

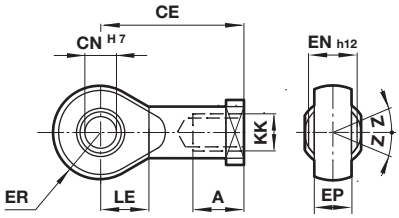

ø	KK	A	CE	ø CN H7	EN h12	ER	LE	Z	(kg)	Model (UF)
32	M10 x 1,25	20	43	10	14	14	15	9 °	0,09	QM/8025/32
40	M12 x 1,25	22	50	12	16	16	17	13 °	0,13	QM/8040/32
50/63	M16 x 1,5	28	64	16	21	21	22	15 °	0,33	QM/8050/32
80/100	M20 x 1,5	33	77	20	25	25	26	15 °	0,67	QM/8080/32
125	M27 x 2	51	110	30	37	35	36	15 °	1,35	QM/8125/32
160/200	M36 x 2	56	125	35	43	40	41	16 °	3	QM/8160/32
250	M42 x 2	60	142	40	49	45	46	17 °	6,4	QM/8250/32
320	M48 x 2	65	160	50	60	57,5	59	12 °	8,7	QM/8320/32

Universal rear eye UR
Conforms to ISO 15552, type MP6

Dimensions in mm
Projection/First angle

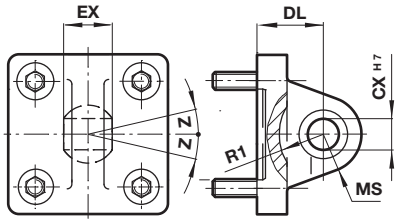

ø	ø CX H7	EX	MS	DL	R1	Z	(kg)	Model (UR)
32	10	14	16	22	13	13 °	0,15	QA/8032/33
40	12	16	18	25	16	13 °	0,25	QA/8040/33
50	16	21	21	27	19	15 °	0,40	QA/8050/33
63	16	21	23	32	22	15 °	0,55	QA/8063/33
80	20	25	28	36	24	14 °	0,90	QA/8080/33
100	20	25	30	41	27	14 °	1,50	QA/8100/33
125	30	37	40	50	36	17 °	2,70	QM/8125/33
160	35	43	44	55	41	16 °	4,6	QM/8160/33
200	35	43	48	60	42	16 °	7,3	QM/8200/33
250	40	49	50	70	47	16 °	16,5	QM/8250/33
320	50	60	58	80	52	14 °	26	QM/8320/33

Wide hinge SW
Conforms to ISO 15552, type AB7

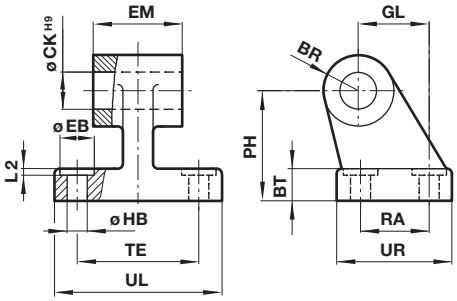

ø	BR	BT	PH	ø CK H9	ø EB	EM	GL
32	10	7	32	10	12	25,6	21
40	11	9	36	12	12	27,6	24
50	13	11	45	12	15	31,6	33
63	15	11	50	16	15	39,6	37
80	15	14	63	16	18	49,6	47
100	18	15	71	20	18	59,6	55
125	22	20	90	25	20	69	70
160	31	25	115	30	20	89	97
200	31	30	135	30	26	89	105
250	39	35	165	40	40	109	128
320	44	40	200	45	48	119	150

ø	ø HB	L2	RA	TE	UL	UR	(kg)	Model (SW)
32	6,6	1,6	18	38	50	31	0,05	M/P19493
40	6,6	1,6	22	41	53	35	0,07	M/P19494
50	9	1,6	30	50	65	45	0,14	M/P19495
63	9	1,6	35	52	67	50	0,18	M/P19496
80	11	2,5	40	66	84	60	0,28	M/P19497
100	11	2,5	50	76	94	70	0,42	M/P19498
125	14	3,2	60	94	124	90	2,70	M/P19499
160	14	4	88	118	156	126	6,3	M/P19679
200	18	4	90	122	162	130	8	M/P19683
250	22	4	110	150	200	160	13,4	M/P19446
320	26	4	122	170	234	186	22	M/P19447

Rear eye R
Conforms to ISO 15552, type MP4

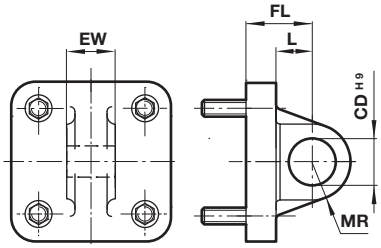

ø	ø CD H9	EW	FL	L	MR	(kg)	Model (R)
32	10	25,6	22	13	9	0,09	QA/8032/27
40	12	27,6	25	16	12	0,11	QA/8040/27
50	12	31,6	27	17	12	0,17	QA/8050/27
63	16	39,6	32	22	15	0,24	QA/8063/27
80	16	49,6	36	22	15	0,37	QA/8080/27
100	20	59,6	41	27	20	0,59	QA/8100/27
125	25	69,6	50	33	25	3,20	QM/8125/27
160	30	89,6	55	35,5	30	6,1	QM/8160/27
200	30	89,6	60	37	30	6,8	QM/8200/27

Our policy is one of continued research and development. We therefore reserve the right to amend, without notice, the specifications given in this document. (2016 - 9159m) © 2024 Norgren GmbH

Narrow hinge SS

Dimensions in mm
Projection/First angle

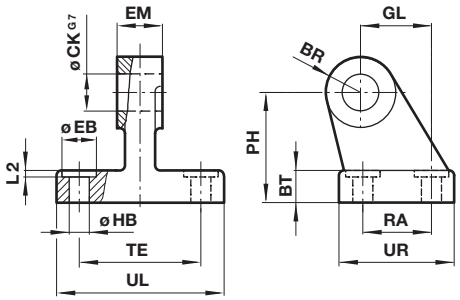

ø	BR	BT	ø CK G7	ø EB	EM	GL	ø HB	L2	PH	RA	TE	UL	UR	(kg)	Model (SS)
32	10	8	10	11	10	21	6,6	1,6	32	18	38	51	31	0,15	M/P19931
40	11	10	12	11	12	24	6,6	1,6	36	22	41	54	35	0,20	M/P19932
50	13	12	16	15	16	33	9	1,6	45	30	50	65	45	0,48	M/P19933
63	15	12	16	15	16	37	9	1,6	50	35	52	67	50	0,50	M/P19934
80	15	14	20	18	20	47	11	2,5	63	40	66	86	60	0,75	M/P19935
100	19	15	20	18	20	55	11	2,5	71	50	76	96	70	1,20	M/P19936
125	22	20	30	20	30	70	14	3,2	90	60	94	124	90	2,50	M/P19937
160	31	25	35	20	35	97	14	4	115	88	118	156	126	6,00	M/P19938
200	31	30	35	26	35	105	18	4	135	90	122	162	130	7,60	M/P19939

Swivel hinge US
Conforms to VDMA 24562 part 2

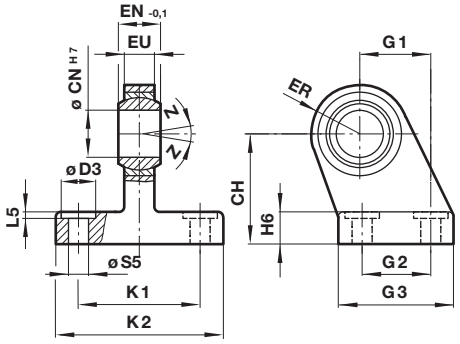

Groove key M/P72816
Weight: 0,01 (kg)

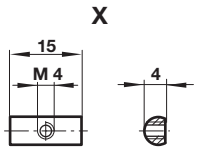

ø	CH	ø CN H7	ø D3	EN -0,1	ER	EU	G1	G2	G3	H6	K1	K2	L5	S5	Z	(kg)	Model (US)
32	32	10	11	14	16	10,5	21	18	31	10	38	51	1,6	6,6	13 °	0,19	M/P40310
40	36	12	11	16	18	12	24	22	35	10	41	54	1,6	6,6	13 °	0,24	M/P40311
50	45	16	15	21	21	15	33	30	45	12	50	65	1,6	9	15 °	0,46	M/P40312
63	50	16	15	21	23	15	37	35	50	12	52	67	1,6	9	15 °	0,59	M/P40313
80	63	20	18	25	28	18	47	40	60	14	66	86	2,5	11	14 °	1,03	M/P40314
100	71	20	18	25	30	18	55	50	70	15	76	96	2,5	11	14 °	1,40	M/P40315
125	90	30	20	37	40	25	70	60	90	20	94	124	3,2	14	17 °	3,10	M/P71355
160	115	35	20	43	44	28	97	88	126	25	118	156	4	14	16 °	6,40	M/P71356
200	135	35	26	43	47	28	105	90	130	30	122	162	4	18	16 °	9,10	M/P71357

Groove cover M/P72725/1000

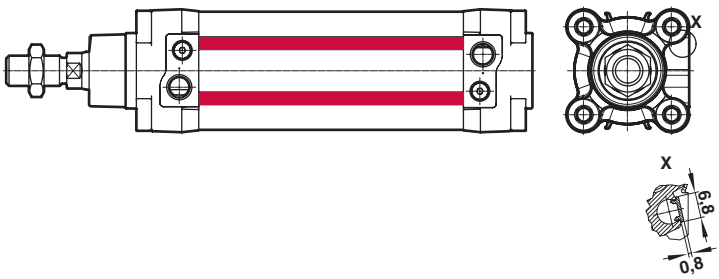

Our policy is one of continued research and development. We therefore reserve the right to amend, without notice, the specifications given in this document. (2016 - 9159m) © 2024 Norgren GmbH

QA/8000/51 – Guide blocks (plain bearings)

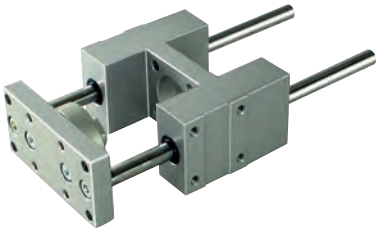

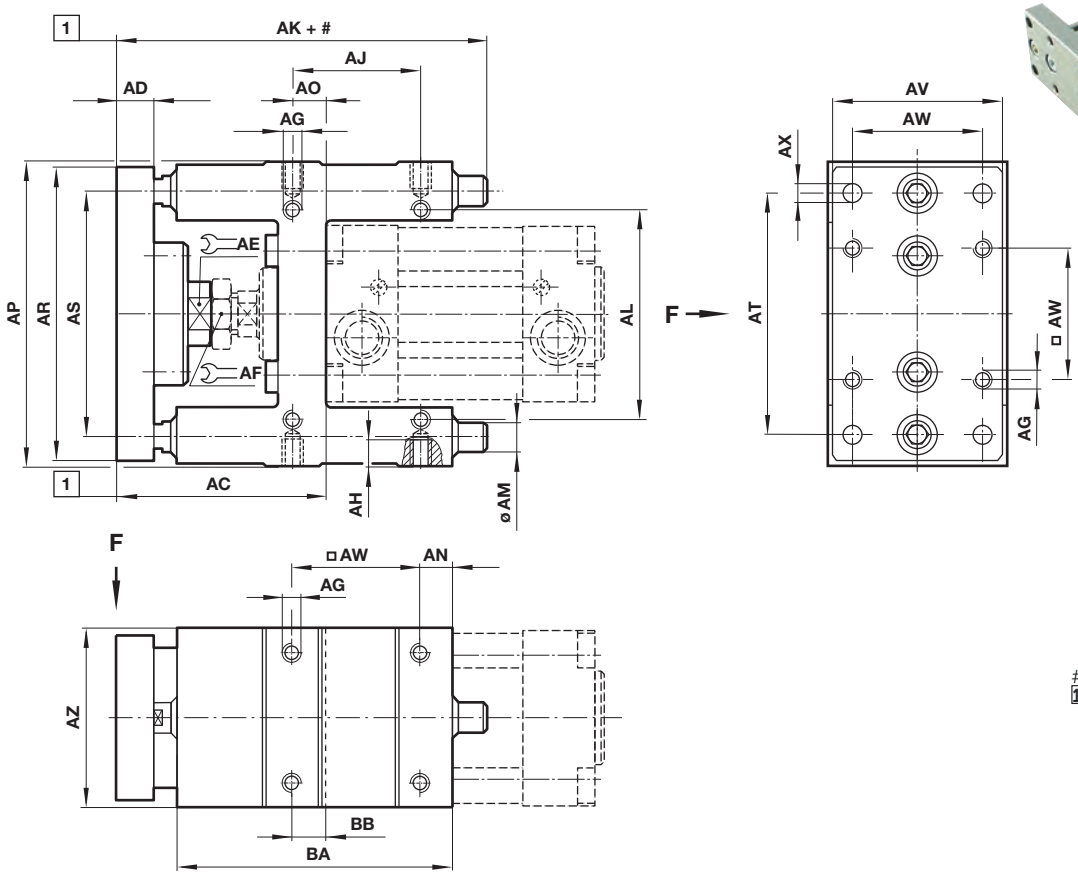

Dimensions in mm
Projection/First angle

Stroke
1 Adjustment range
ø 32 + 40 mm = +2 mm
ø 50 + 63 mm = +4 mm
ø 80 + 100 mm = +6 mm

ø	AC	AD	AE	AF	AG	AH	AJ	AK	AL	ø AM	AN	AO	AP
32	69	12	15	17	M 6	10	32,5	110	58	10	6	9	100
40	74	12	15	19	M 6	10	38	122	64	12	6	11	106
50	91,5	15	22	24	M 8	12	46,5	135	80	12	6	19	125
63	92	15	22	24	M 8	12	56,5	153	95	12	7	15	132
80	106	15	27	30	M 10	15	50	180	130	16	9	14	165
100	111	15	27	30	M 10	17	70	199	150	16	9	19	185

ø	AR	AS	AT	AV	□ AW	ø AX	AZ	BA	BB	(kg) at 0 mm	(kg) per 100 mm	Model
32	90	74	78	45	32,5	6,6	48	76	9	1,0	0,06	QA/8032/51/*
40	100	80	84	50	38	6,6	56	85	11	1,2	0,09	QA/8040/51/*
50	120	96	100	60	46,5	9	66	99	19	1,8	0,09	QA/8050/51/*
63	125	104	105	70	56,5	9	76	114	15	2,2	0,09	QA/8063/51/*
80	155	130	130	90	72	11	98	134,5	25	4,1	0,16	QA/8080/51/*
100	175	150	150	110	89	11	118	153,5	28,5	5,8	0,16	QA/8100/51/*

* Insert standard stroke length: 50, 100, 160, 200, 250, 320, 400 and 500 mm, use nearest standard stroke.
Note: Supplied complete with mounting screws for cylinders

Maximum load

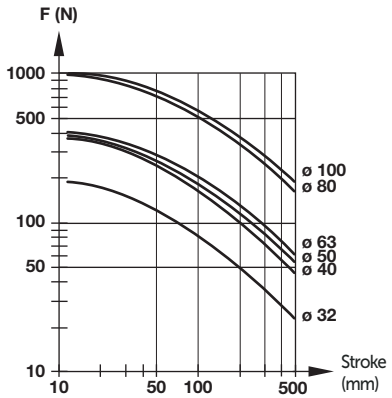

Our policy is one of continued research and development. We therefore reserve the right to amend, without notice, the specifications given in this document. (2016 - 9159m) © 2024 Norgren GmbH

QA/8000/61 – Guide blocks (roller bearings)

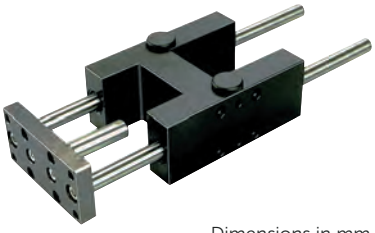

Dimensions in mm
Projection/First angle

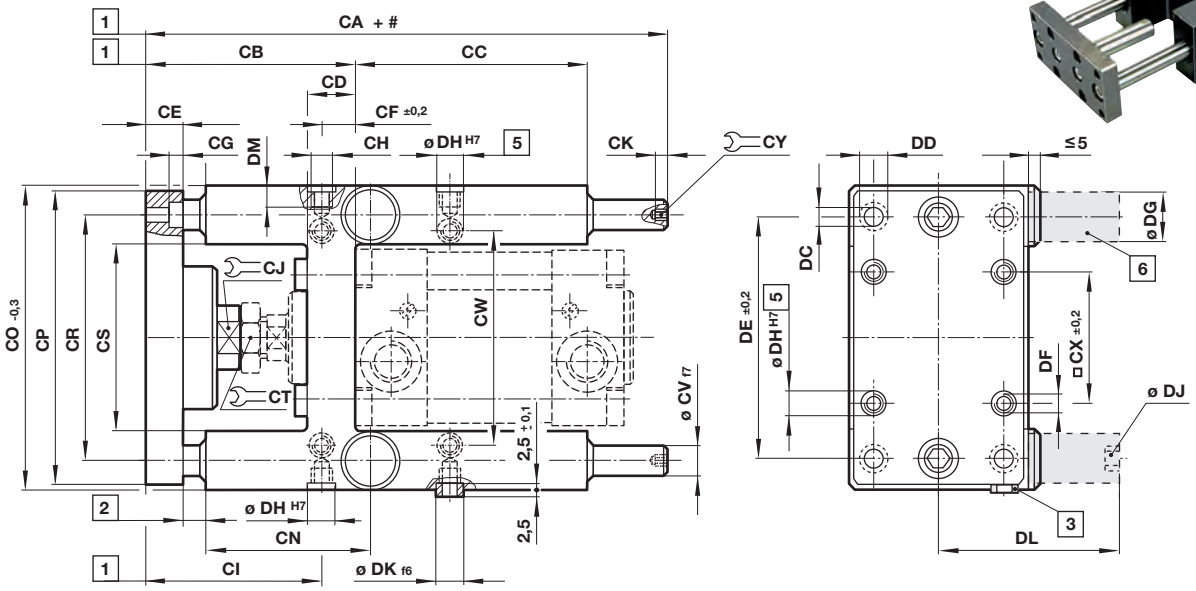

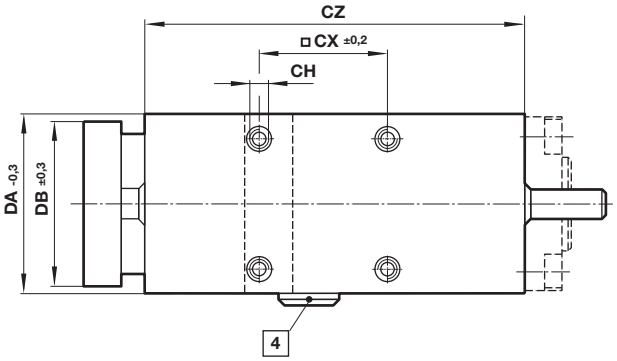

Stroke
1 Adjustment range
ø 32 + 40 mm = +5 mm
ø 50 ... 100 mm = +10 mm
2 Safety zone 28 mm
3 Centering sleeve
4 Blanking plug (remove when using locking catridges)
5 2,5 mm deep
6 Locking cartridge on request

ø	CA	CB	CC	CD	CE	CF ±0,2	CG	CH	CI	CJ	CK	CN	CO -0,3
32	177	100	65	28	12	15,3	6,5	M 6	84,5	13	5	61	97
40	192	111	69	33	12	23	6,5	M 6	88	15	6	67	115
50	237	128	65	40	15	33,8	9	M 8	94	22	6	75,5	137
63	237	128	97	40	15	29,3	9	M 8	98,5	22	6	80	152
80	280	151	112	50	20	37	11	M 10	114	27	7	92	189
100	280	156	112	55	20	40,5	11	M 10	115,5	27	7	93	213

ø	CP	CR	CS	CT	ø CV F7	CW	□ CX ±0,2	CY	CZ	DA -0,3	DB ±0,3	DC	ø DD
32	90	74	50,5	17	12	61	32,5	5	125	50	45	6,6	11
40	110	87	58,5	19	16	69	38	6	140	58	54	6,6	11
50	130	104	70,5	24	20	85	46,5	6	150	70	63	9	15
63	145	119	85,5	24	20	100	56,5	6	182	85	80	9	15
80	180	148	105,5	30	25	130	72	8	215	105	100	11	18
100	200	172	130,5	30	25	150	89	8	220	130	120	11	18

ø	DE ±0,2	DF	ø DG	ø DH H7	DJ	ø DK f6	DL	DM	(kg) at 0 mm	(kg) per 100 mm	Locking force (N)	Cartridge *1)	Model
32	78	M 6	20	9	M 5	9	45	14	1,2	0,18	600	QA/8032/63	QA/8032/61/*
40	84	M 6	24	9	G1/8	9	61,5	14	2,2	0,32	1000	QA/8040/63	QA/8040/61/*
50	100	M 8	30	11	G1/8	11	76,5	16	3,6	0,49	1500	QA/8050/63	QA/8050/61/*
63	105	M 8	30	11	G1/8	11	76,5	16	4,6	0,49	1500	QA/8050/63	QA/8063/61/*
80	130	M 10	48	13	G1/8	13	119	20	8,7	0,77	3000	QA/8080/63	QA/8080/61/*
100	150	M 10	48	13	G1/8	13	119	20	11	0,77	3000	QA/8080/63	QA/8100/61/*

* Insert standard stroke length: 50, 100, 160, 200, 250, 320, 400 and 500 mm, use nearest standard stroke.
Note: Supplied complete with mounting screws for cylinders
*1) Locking cartridges should be ordered separately. Passive - pressure to unlock. Two required per guide block.

Our policy is one of continued research and development. We therefore reserve the right to amend, without notice, the specifications given in this document. (2016 - 9159m) © 2024 Norgren GmbH

Maximum load for QA/8000/61

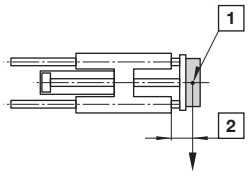

Dimensions in mm
Projection/First angle

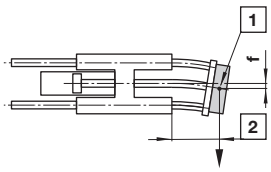

1 Centre of gravity load capacity
2 Outstroke

Maximum load capacity is dependent on the outstroke of a horizontally installed guide unit. In the case of short stroke operation, the load capacity figures taken from the diagram must be multiplied by the correction factor (diagram 2). In the curves of load capacity (diagram 1), the short stroke corrections have already been taken into account for an outstroke > 60 mm.

The total deflection of guide rods will be determined by the addition of that due to own weight (diagram 3) and that due to load capacity (diagram 4).

Maximum load capacity depending on outroke

(diagram 1) Load capacity

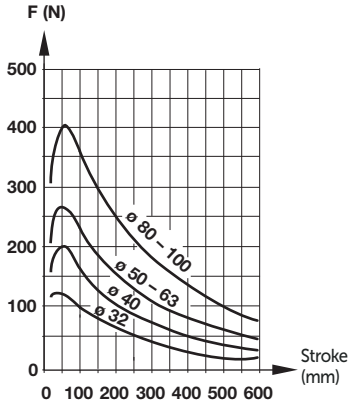

(diagram 2) Correction factor

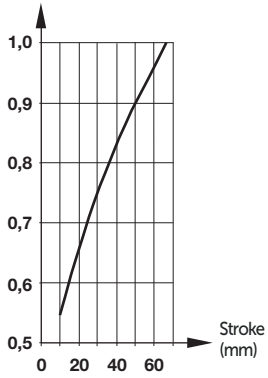

Deflection caused by own weight (diagram 3)

Deflection

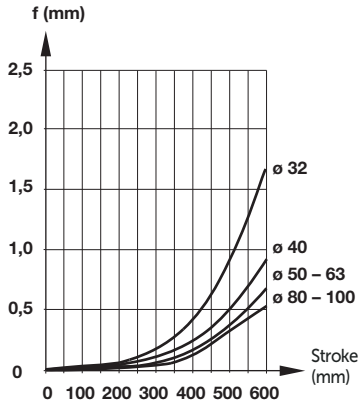

Deflection caused by a load of 10 N (diagram 4)

Deflection

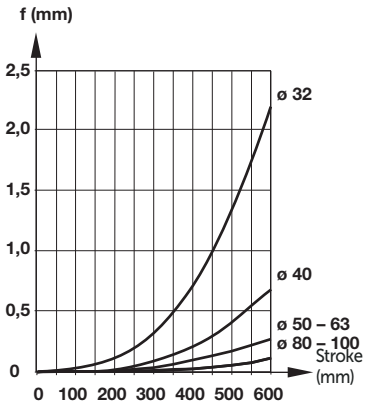

In the case of shock load applications, the figures given in hte diagrams above must be reduced by a factor of 2.

Our policy is one of continued research and development. We therefore reserve the right to amend, without notice, the specifications given in this document. (2016 - 9159m) © 2024 Norgren GmbH

QA/8000/81 – Guide blocks (long coupling)
QA/8000/85 – Guide blocks (short coupling)

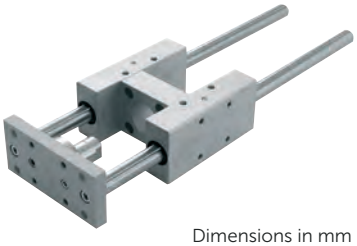

Dimensions in mm
Projection/First angle

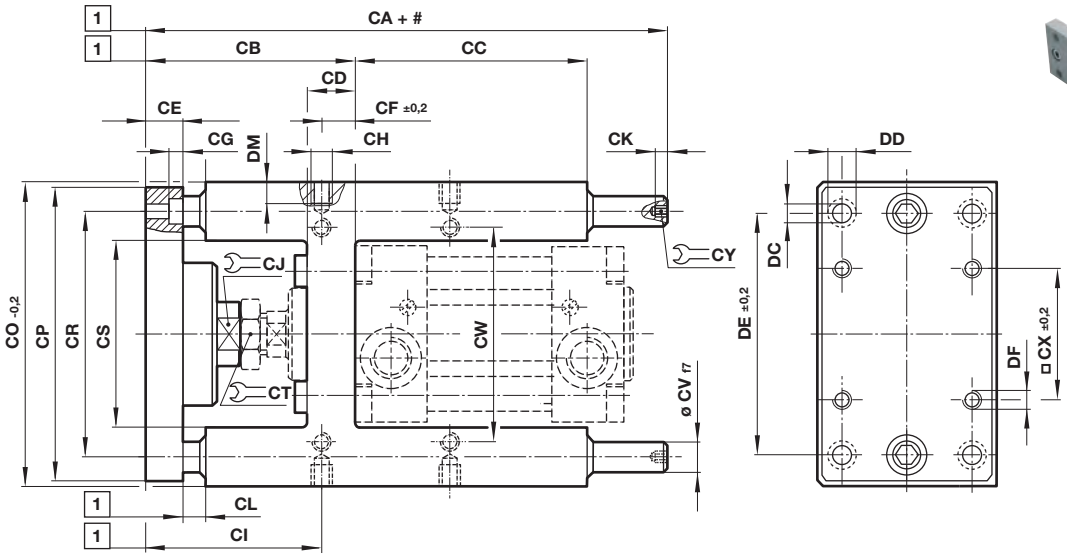

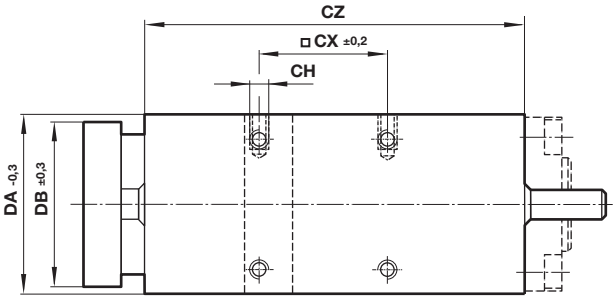

Stroke
1 Adjustment range
ø 32 + 40 mm = +5 mm
ø 50 ... 100 mm = +10 mm

ø	CA /81	CA /85	CB + /81	CB + /85	CC	CD	CE	CF ±0,2	CG	CH	CI /81	CI /85	CJ
32	174	149	89	64	75	24	12	4,3	6,5	M 6	84,7	59,7	15
40	189	164	99	74	80	28	12	11	6,5	M 6	88	63	15
50	210	181	113	88	78	34	15	18, 8	8,5	M 8	94,2	69,2	20
63	235	210	114	89	106	34	15	15,3	9	M 8	98,7	73,7	20
80	265	240	139	114	111	50	20	25	11	M 10	114	89	26
100	288	265	145	120	128	55	20	30	11	M 10	115	90	26

ø	CK	CL /81	CL /85	CO ±0,2	CP	CR	CS	CT	ø CV f8	CW	□ CX ±0,2	CY	CZ
32	5	27	2	97	93	74	51	17	12	61	32,5	5	125
40	6	27	2	115	112	87	58,2	19	16	69	38	6	140
50	6	28	3	137	134	104	70,2	24	20	85	46,5	6	148
63	6	27	2	152	147	119	85,2	24	20	100	56,5	6	178
80	7	35	10	189	180	148	105,5	30	25	130	72	8	195
100	7	35	10	213	206	173	130,5	30	25	150	89	8	218

ø	DA ±0,2	DB ±0,3	ø DC	ø DD	DE ±0,2	DF	DM	(kg) /81 at 0 mm	(kg) /85 at 0 mm	(kg) /81; /85 per 100 mm	Model /81	Model /85
32	49	45	6,6	11	78	M 6	12	1,2	1,15	0,18	QA/8032/81	QA/8032/85
40	58	55	6,6	11	84	M 6	12	2,2	2,15	0,32	QA/8040/81	QA/8040/85
50	70	65	9	15	100	M 8	16	3,6	3,55	0,49	QA/8050/81	QA/8050/85
63	85	80	9	15	105	M 8	16	4,6	4,55	0,49	QA/8063/81	QA/8063/85
80	105	100	11	18	130	M 10	20	8,7	8,65	0,77	QA/8080/81	QA/8080/85
100	130	120	11	18	150	M 10	20	11	10,95	0,77	QA/8100/81	QA/8100/85

* Insert standard stroke length: 50, 100, 160, 200, 250, 320, 400 and 500 mm, use nearest standard stroke.
Note: Supplied complete with mounting screws for cylinders

Our policy is one of continued research and development. We therefore reserve the right to amend, without notice, the specifications given in this document. (2016 - 9159m) © 2024 Norgren GmbH

Maximum load for QA/8000/81 and /85

Dimensions in mm
Projection/First angle

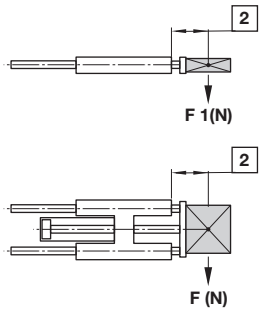

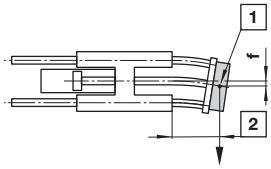

1 Centre of gravity load capacity
2 Outstroke

F1 = F x 0,9
Static force: F2 = F x 2

Max. load capacity (diagram 1) is dependent on the outstroke of a horizontally installed guide unit.

The total deflection of guide rods will be determined by the addition of the amount of deflection caused by own weight (according to diagram 2) plus the amount of deflection due to load capacity (according to diagram 3).

Maximum load capacity depending on outroke Deflection caused by a load of 10 N (diagram 1)

Load capacity

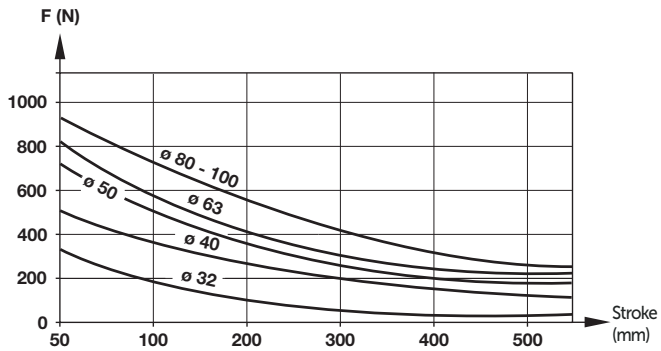

Deflection caused by own weight (diagram 2)

Deflection (mm)

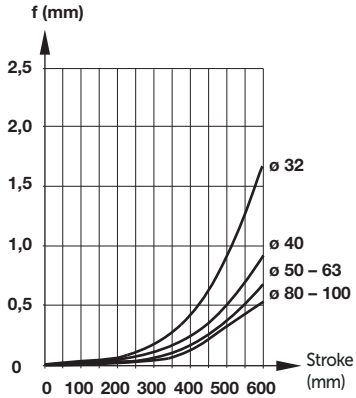

Deflection caused by a load of 10 N (diagram 3)

Deflection (mm)

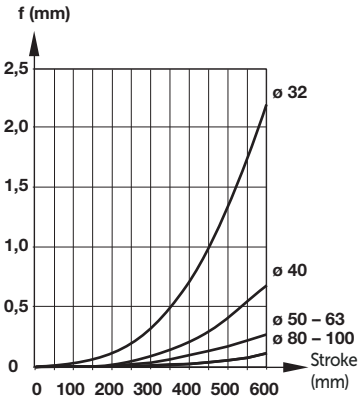

In the case of shock load applications, the figures given in hte diagrams above must be reduced by a factor of 2

Our policy is one of continued research and development. We therefore reserve the right to amend, without notice, the specifications given in this document. (2016 - 9159m) © 2024 Norgren GmbH

- Magnetically operating reed switch - Round style
- Suitable for all cylinder ranges with magnetic piston
- Switches can be mounted flush with the delivered special adaptor
- LED indicator on LSU models
- Alternative variants allows a wide range of application

Technical features

Operation:
M/50/LSU Normally open with LED (yellow)

Switching voltage (Ub):
10 ... 240 V a.c./170 V d.c.

Switching voltage output:
Ub - 2,7 V

Switching current (see graph overleaf):
0,18 A max.

Switching power:
10 W/10 VA max.

Contact resistance:
150 mΩ

Response time:
1,8 ms

Operating temperature:
-25 ... +80 °C (-13 ... +176 °F)

High temperature version:
+150 °C max. (+302 °F)

Protection rating (EN 60529):
IP66

Shock resistance:
50 g (during 11 ms)

Vibration resistance:
35 g (at 2000 Hz)

Cable type:
2 x 0,25: PVC, PUR or silikone
3 x 0,25 PVC

Cable length:
2, 5 or 10 m

Electromagnetic compatibility according to:
EN 60947-5-2

Materials:
Body: plastic
Cable: see table below

Technical data - Reed switches - additional information see data sheet en 4.3.005

Symbol	Voltage (V a.c.)	Voltage (V d.c.)	Current maximum (mA)	Function	Operating temperature (°C)	LED	Protection class	Plug	Cable length (m)	Cable type	Weight (g)	Model
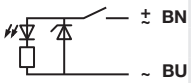 ± BN ~ BU	10 ... 240	10 ... 170	180	Normally open	-25 ... +80	•	IP 66	–	2, 5 or 10	PVC 2 x 0,25	37	M/50/LSU/*V
	10 ... 240	10 ... 170	180	Normally open	-25 ... +80	•	IP 66	–	5	PUR 2 x 0,25	37	M/50/LSU/5U
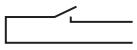 BN BU	10 ... 240	10 ... 170	180	Normally open	-25 ... +150	–	IP 66	–	2	Silicon 2 x 0,25	37	TM/50/RAU/2S
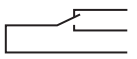 BK BU BN	10 ... 240	10 ... 170	180	Changeover	-25 ... +80	–	IP 66	–	5	PVC 3 x 0,25	37	M/50/RAC/5V
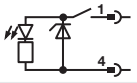 1 ± BN ~ 4 ~ BK	10 ... 60	10 ... 60	180	Normally open	-25 ... +80	•	IP 66	M8 x 1	0,3	PVC 3 x 0,25	16	M/50/LSU/CP *1)
	10 ... 60	10 ... 60	180	Normally open	-25 ... +80	•	IP 66	M12 x 1	0,3	PVC 3 x 0,25	16	M/50/LSU/CC *1)

* Insert cable length; *1) Plug-in connector see page 12

Our policy is one of continued research and development. We therefore reserve the right to amend, without notice, the specifications given in this document. (2016 - 9159m) © 2024 Norgren GmbH

Dimensions

M/50/LSU/*V, M/50/LSU/5U,
TM/50/RAU/2S
Cable length L = 2, 5 or 10 m

Dimensions in mm
Projection/First angle

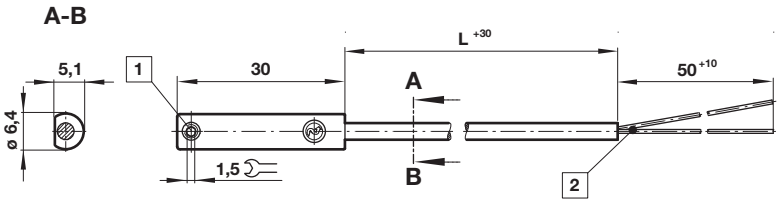

M/50/RAC/5V
Cable length L = 5 m

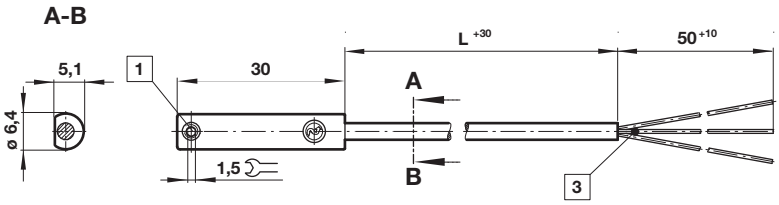

M/50/LSU/CP
M/50/LSU/CC

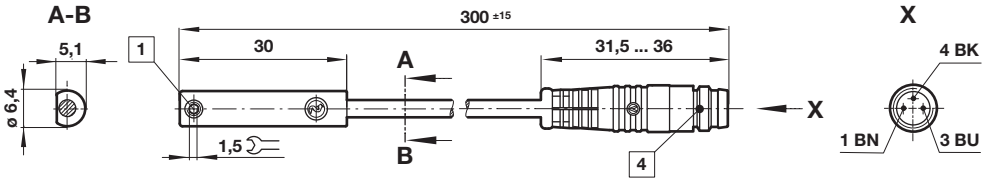

1 Fixing screw
2 + BN = brown; - BU = blue (output)
3 - BK = black; + BN = brown; - ≠BU = blue
4 Version CP: Plug M8 x 1, color code: BK = +; BN = -; BU = output
Version CC: Plug M12 x 1, color code: BK = +; BN = -; BU = output

Accessories

Plug-in connector cable with nut

Outer cover	Cable length (m)	Weight (kg)	Connector	Connector
PVC 3 x 0,25	5	0,18	M8 x 1 straight connector	M/P73001/5
PUR 3 x 0,25	5	0,18	M8 x 1 straight connector	M/P73002/5
PVC 3 x 0,25	5	0,18	angled connector 90°	M/P34615/5
PUR 3 x 0,25	5	0,18	angled connector 90°	M/P34596/5
PUR 3 x 0,34	5	0,21	M12 x 1 straight connector	M/P34594/5

QM/27/2/* – Switch mounting brackets for Round barrel Switch: M/50

ø	A	B	L	Weight (kg)	Model
32	9	6	12	0,010	QM/27/2/1
40	9	7	12	0,010	QM/27/2/1
50	7	5	12	0,010	QM/27/2/1
63	7	6	12	0,010	QM/27/2/1

ø	A	B	L	Weight (kg)	Model
80	4	4	12	0,010	QM/27/2/1
100	3	2	12	0,010	QM/27/2/1
125	-2	-2	12	0,010	QM/27/2/1
160	-10	-9	12	0,010	QM/27/2/1

ø	A	B	L	Weight (kg)	Model
200	-12	-16	12	0,010	QM/27/2/1
250	-10	-6	35	0,015	QM/27/2/2
320	-20	-16	35	0,015	QM/27/2/3

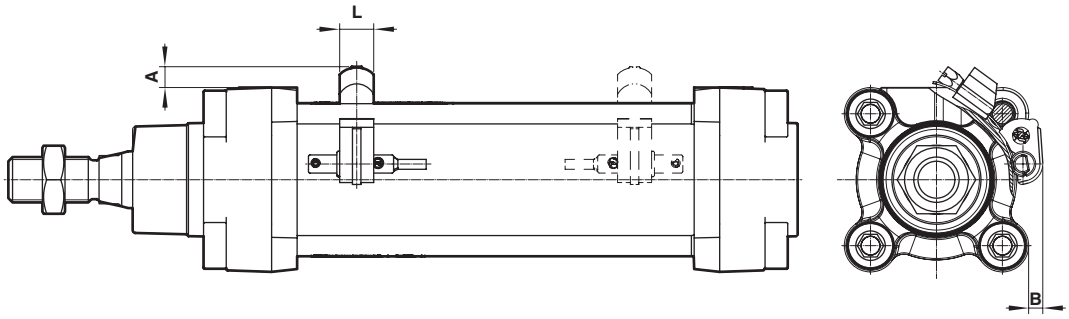

Our policy is one of continued research and development. We therefore reserve the right to amend, without notice, the specifications given in this document. (2016 - 9159m) © 2024 Norgren GmbH

- Magnetically operated switch, solid state - round style
- IO-Link version available
- Suitable for all cylinder ranges with magnetic piston
- Switches can be mounted flush in all profile cylinders
- Reliable switching with a very fast reponse time
- Particularly suited for use in high levels of vibration
- LED indicator as standard
- UL listed

Technical features

Operation:
PNP / NPN (see table)
Output with LED (yellow)
Normally open (standard)

Switching voltage (Ub):
10 ... 30 V d.c.
("supply class 2" acc. to cULus)

Voltage drop at output:
< 2,5 V

Residual current:
< 0,5 mA

Switching current (see graph):
100 mA max. (standard)
300 mA max. (M/50/EHP

Switching power:
3,0 W max. (standard)
9,0 W max. (M/50/EHP)

Response time:
< 0,1 ms (standard)
< 5 ms (M/50/IOP)

Operating frequency:
1 kHz (standard)
200 Hz (M/50/IOP)

Responsiveness: 2,8 mT

Hysteresis:
0,5 ... 1,5 mT
0,2 mT (M/50/IOP)

Repeatability: < 0,1 mT

Protection rating (EN 60529):
IP67 (standard)
IP68 (M/50/EAP/5U, M/50/EHP/5U)

Operating temperature:
-40 ... +80 °C (-40 ... 176 °F) (permanently fixed cable)
-25 ... +80 °C (-13 ...176 °F) (moving cable)

Cable type:
PVC 3 x 0,14 mm² (standard)
PUR 3 x 0,14 mm² (M/50/E*P/*U and all variants with connector)

Cable length: 2, 5 and 10 m

Electromagnetic compatibility according to:
EN 60947-5-2

Materials:
Housing: plastic
Thread insert: brass
Set screw: stainless steel
Cable: see table below

Mounting type:
Flush mountable

Technical data - Solid state - additional information see data sheet en 4.3.007

Symbol	Voltage (V DC)	Current maximum (mA)	Function	IO-Link *1)	Operating temperature (°C)	LED	Protection class	Connector	Cable length (m)	Cable type	Weight (g)	Model
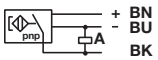	10 ... 30	100	PNP		-40 ... +80	•	IP67	---	2	PVC 3 x 0,14	23	M/50/EAP/2V
	10 ... 30	100	PNP		-40 ... +80	•	IP67	---	5	PVC 3 x 0,14	56	M/50/EAP/5V
	10 ... 30	100	PNP		-40 ... +80	•	IP67	---	10	PVC 3 x 0,14	102	M/50/EAP/10V
	10 ... 30	100	PNP / NPN	•	-40 ... +80	•	IP67	---	5	PVC 3 x 0,14	56	M/50/IOP/5V
	10 ... 30	100	PNP		-40 ... +80	•	IP68	---	5	PUR 3 x 0,14	56	M/50/EAP/5U
	10 ... 30	100	PNP		-40 ... +80	•	IP67	---	10	PUR 3 x 0,14	102	M/50/EAP/10U
	10 ... 30	300	PNP		-40 ... +80	•	IP67	---	2	PVC 3 x 0,14	23	M/50/EHP/2V
	10 ... 30	300	PNP		-40 ... +80	•	IP67	---	5	PVC 3 x 0,14	56	M/50/EHP/5V
	10 ... 30	300	PNP		-40 ... +80	•	IP67	---	10	PVC 3 x 0,14	102	M/50/EHP/10V
	10 ... 30	300	PNP		-40 ... +80	•	IP68	---	5	PUR 3 x 0,14	56	M/50/EHP/5U
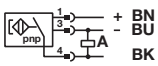	10 ... 30	100	PNP		-40 ... +80	•	IP67	M8 x 1	0,3	PUR 3 x 0,14	7	M/50/EAP/CP
	10 ... 30	100	PNP / NPN	•	-40 ... +80	•	IP67	M8 x 1	0,3	PUR 3 x 0,14	7	M/50/IOP/CP
	10 ... 30	100	PNP		-40 ... +80	•	IP67	M12 x 1	0,3	PUR 3 x 0,14	16	M/50/EAP/CC
	10 ... 30	100	PNP		-40 ... +80	•	IP67	M12 x 1	2	PUR 3 x 0,14	35	M/50/EAP/CC/2
	10 ... 30	100	PNP / NPN	•	-40 ... +80	•	IP67	M12 x 1	0,3	PUR 3 x 0,14	16	M/50/IOP/CC
	10 ... 30	300	PNP		-40 ... +80	•	IP67	M8 x 1	0,3	PUR 3 x 0,14	7	M/50/EHP/CP
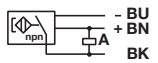	10 ... 30	100	NPN		-40 ... +80	•	IP67	---	2	PVC 3 x 0,14	23	M/50/EAN/2V
	10 ... 30	100	NPN		-40 ... +80	•	IP67	---	5	PVC 3 x 0,14	56	M/50/EAN/5V
	10 ... 30	100	NPN		-40 ... +80	•	IP67	---	10	PVC 3 x 0,14	102	M/50/EAN/10V
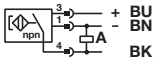	10 ... 30	100	NPN		-40 ... +80	•	IP67	M8 x 1	0,3	PUR 3 x 0,14	7	M/50/EAN/CP

Color code: see next page
*1) IO-Link functionality: see next page

Our policy is one of continued research and development. We therefore reserve the right to amend, without notice, the specifications given in this document. (2016 - 9159m) © 2024 Norgren GmbH

IO-Link Switch conforming to IEC 61131-9

Properties and Functionality	M/50/EAP, M/50/EAN M/50/EHP	M/50/IOP	
Operating Mode	Standard	Standard	IO-Link
Power LED		•	•
LED sensor signal	•	•	•
Normally open (delivery status)	•	•	•
Normally closed		O	•
Delay mode		O	•
Installation aid		•	•
Temperature measurement			•
Detection counter			•
Teach functionality			•
Responsiveness adjustment			•

Note: IODD for the M/50/IOP switches available on the Norgren homepage.
https://www.norgren.com/uk/en/technical-support/software

• = included
O = optional (manufacture pre-setting required)

Switching current and switching voltage

M/50/EAP, M/50/EAN, M/50/IOP

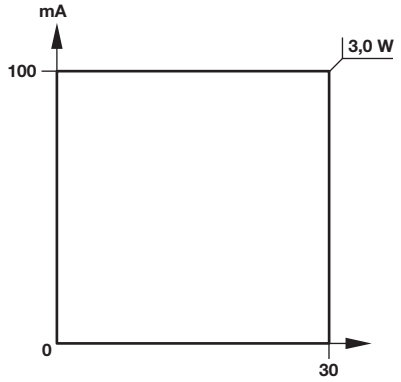

M/50/EHP

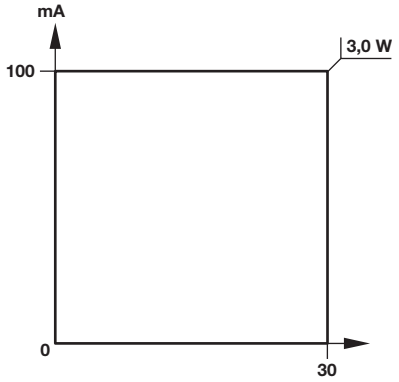

Dimensions

Dimensions in mm
Projection/First angle

M/50/EAP/*V,
M/50/EAP/*U,
M/50/IOP/5V,
M/50/EHP/*V,
M/50/EHP/5U,
M/50/EAN/*V
Cable length L = 2, 5 or 10 m

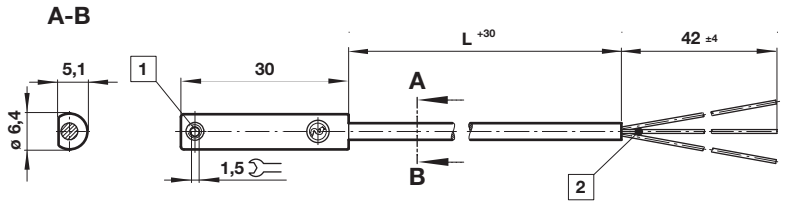

M/50/EAP/CP,
M/50/EAN/CP,
M/50/IOP/CP,
M/50/EHP/CP

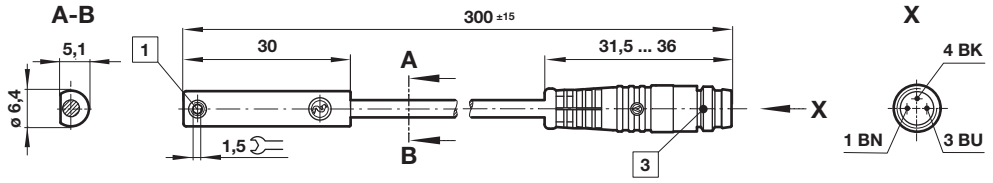

M/50/EAP/CC,
M/50/IOP/CC,
M/50/EHP/CC

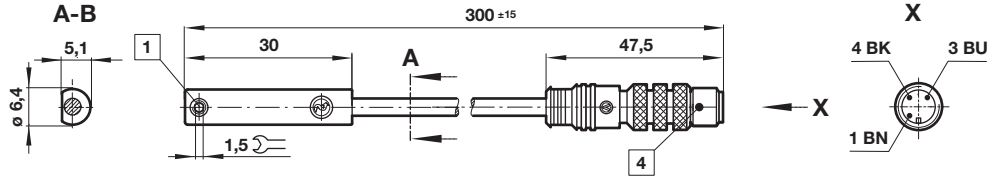

1 Fixing screw
2 Color code: BK = black (output); BN = brown (+); BU = blue (-)
3 Connector M8 x 1; 1 BN = +; 3 BU = -; 4 BK = output
4 Connector M12 x 1; 1 BN = +; 3 BU = -; 4 BK = output

Our policy is one of continued research and development. We therefore reserve the right to amend, without notice, the specifications given in this document. (2016 - 9159m) © 2024 Norgren GmbH

- Magnetically operating Reed switch & Solid state - Block style
- Suitable for all Rond barrel cylinder with magnetic piston
- Alternative materials allows a wide range of application
- Switch with plug

Technical features

Operation:
TQM/31, QM/32 normally open with LED (yellow)

Switching voltage (Ub):
10 ... 240 V a.c./d.c.

Switching voltage output:
Ub - 2 V (QM/32)

Switching current (see graph overleaf):
1 A max. (QM/32)

Switching power:
50 W/50 VA max.

Contact resistance:
100 mΩ

Response time:
3 ms

Operating temperature:
-20 ... +80 °C (-4 ... +176 °F)

High temperature version:
+150 °C max. (+302 °F)

Protection rating (EN 60529):
IP 66

Shock resistance:
50 g (during 11 ms)

Vibration resistance:
35 g (50 to 2000 Hz)

Cable type:
PVC 2 x 0,75, PUR 2 x 0,75
VMQ 2 x 0,75 (TQM/31)

Cable length:
2, 5 or 10 m

Electromagnetic compatibility according to:
EN 60947-5-2

Materials:
Body: plastic
Cable: see table below

Technical data - Reed switches - additional information see data sheet en 4.3.021

Symbol	Voltage (V a.c./V d.c.)	Current maximum (A)	Function	Temperature (°C)	LED	Protection class	Features	Cable length (m)	Cable type	Weight (g)	Model
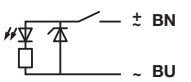 ± BN ~ BU	10 ... 240	1	Normally open	-20 ... +80	•	IP 66	—	2, 5 or 10	PVC 2 x 0,75	108 (2 m)	QM/32/*
	10 ... 240	1	Normally open	-20 ... +80	•	IP 66	—	2	PUR 2 x 0,75	108	QM/32/2/PU
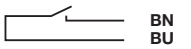 BN BU	10 ... 240	2	Normally open	-20 ... +150	—	IP 66	High temperature	2, 5 or 10	Silicon 2 x 0,75	102 (2 m)	TQM/31/*
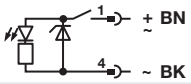 1 ± BN ~ 4 ~ BK	10 ... 240	1	Normally open	-20 ... +80	•	IP 66	Plug M12 x 1	—	—	15	QM/32/P *1)

Technical data - Solid state - additional information see data sheet en 4.3.025

Symbol	Voltage (V DC)	Current max. (mA)	Function	Operating temperature (°C)	LED	Protection class	Connector	Cable length (m)	Cable type	Weight (g)	Model
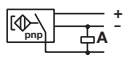 + BN - BU A BK	10 ... 30	200	PNP	-20 ... +80	•	IP66	---	2	PVC 3 x 0,5	104	QM/132/2
	10 ... 30	200	PNP	-20 ... +80	•	IP66	---	5	PVC 3 x 0,5	242	QM/132/5
	10 ... 30	200	PNP	-20 ... +80	•	IP66	---	10	PVC 3 x 0,5	472	QM/132/10
	10 ... 30	200	PNP	-20 ... +80	•	IP66	---	5	PUR 3 x 0,5	242	QM/132/5/PU
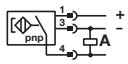 + BN - BU A BK	10 ... 30	200	PNP	-20 ... +80	•	IP66	M12 x 1			13	QM/132/P

* Insert cable length
*1) Plug-in connector see page below; Color code: BK = black, BN = brown, BU = blue

Our policy is one of continued research and development. We therefore reserve the right to amend, without notice, the specifications given in this document. (2016 - 9159m) © 2024 Norgren GmbH

Dimensions

TQM/31, QM/32, QM/132

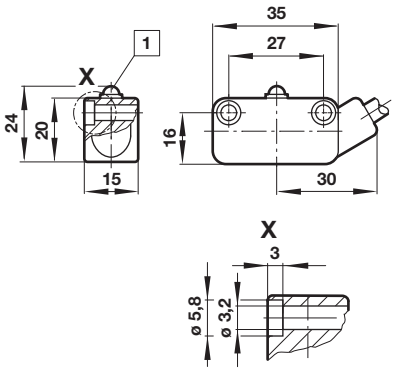

QM/32/P, QM/132/P

Dimensions in mm
Projection/First angle

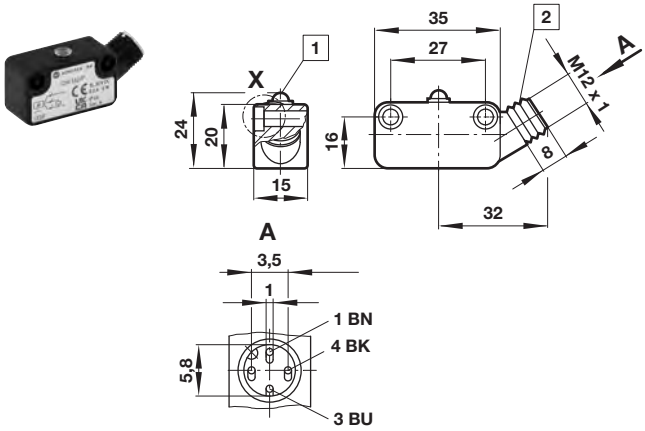

1 LED (yellow)
2 Plug M12 x1
Color code
BK = black
BN = brown
BU = blue

Accessories

Plug-in connector cable with nut

Outer cover	Cable length (m)	Weight (kg)	Connector	Connector
PVC 3 x 0,34	5	0,21	M12 x 1	M/P34692/5
PUR 3 x 0,34	5	0,21	M12 x 1	M/P34594/5

QM/31/000/22 – Switch mounting brackets for Round barrel Switches: TQM/31, QM/32, QM/132

Cy. ø	A	B	Weight (kg)	Model
32	5	42	0,026	QM/31/032/22
40	4,5	46	0,026	QM/31/032/22
50	4,5	50,5	0,026	QM/31/032/22
63	4	56,5	0,026	QM/31/032/22
80	2	62,5	0,028	QM/31/080/22
100	1,5	70,5	0,028	QM/31/080/22
125	0	81	0,028	QM/31/080/22
160	0	91,5	0,023	QM/31/160/22
200	-4	106	0,023	QM/31/160/22
250	-3	138	0,041	QM/31/250/22
320	-21	154	0,080	QM/31/320/22

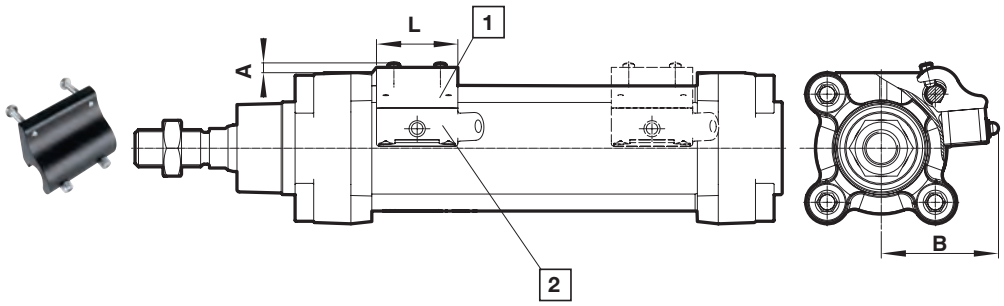

1 Bracket
2 Switch

Our policy is one of continued research and development. We therefore reserve the right to amend, without notice, the specifications given in this document. (2016 - 9159m) © 2024 Norgren GmbH

- Pneumatic proximity sensor
- Port size: ø 3 mm
- Pneumatic proximity sensor
- Optical pressure indicator signals position
- Non-contact sensing with pneumatic output
- Intrinsically safe – no problem in explosion areas

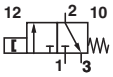

Technical features

Medium:
Compressed air, filtered and non-lubricated

Operation:
Pneumatic proximity switch for non-contact sensing via a magnetic field

Operating pressure:
2 ... 6 bar (29 ... 87 psi)

Connections:
Pipes for 3 mm I/D tubing

Vibration resistance:
10 ... 50 Hz (to IEC 68 T. 2-27)

Shock resistance:
500 m/s2 over a period of 5 ms (to IEC 68 T. 2-27)

Flow rate:
40 l/min

Orifice size:
2 mm

Repeatability:
± 0,2 mm

Can be used with cylinder:
ø 10 ... 100 mm

Operating temperature:
-15 ... +60 °C (+5 ... +140 °F)
Humidity and water content:
Air supply must be dry.
Corresponding of the application and working conditions the air must be dry enough to avoid condensate. The pressure dewpoint must be minimum 15 °C under the application and working conditions.

Materials
Body: Plastic
Pipe connectors: Brass
Holding strap: CU ZU 37 (brass)

Pneumatic proximity sensor - additional information see data sheet N/en 4.3.061

Symbol	Operating pressure (bar)	Flow rate (l/min)	Orifice size (mm)	Optical indicator	Connections	Model
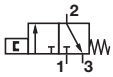	2 ... 6	40	2	•	Pipes for 3 mm I/D tubing	QM/140

Dimensions

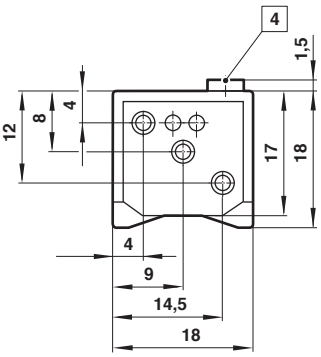

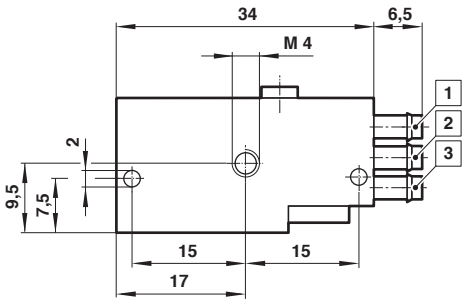

1 Compressed air port 1
2 Output port 2
3 Exhaust port
4 Optical indicator

Our policy is one of continued research and development. We therefore reserve the right to amend, without notice, the specifications given in this document. (2016 - 9159m) © 2024 Norgren GmbH

QM/140/010/22 – Bracket with holding strap

Pneumatic switch: QM/140

Dimensions in mm
Projection/First angle

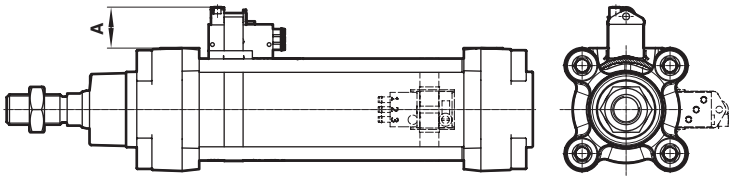

ø	A	(kg)
32	22	0,020
40	23	0,020
50	22	0,020
63	24	0,020
80	23	0,020
100	24,5	0,020

Valve mounting kit for Profile barrel

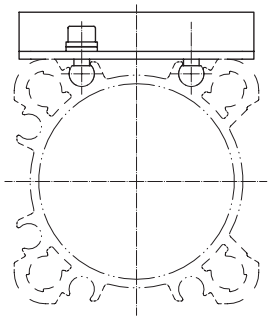

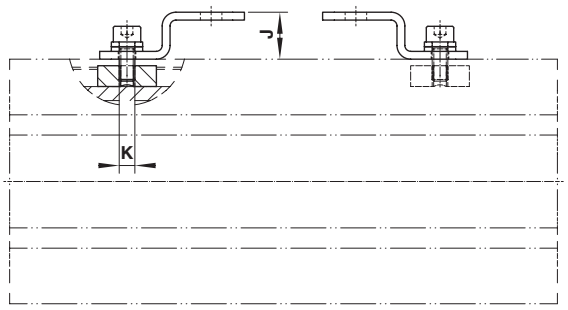

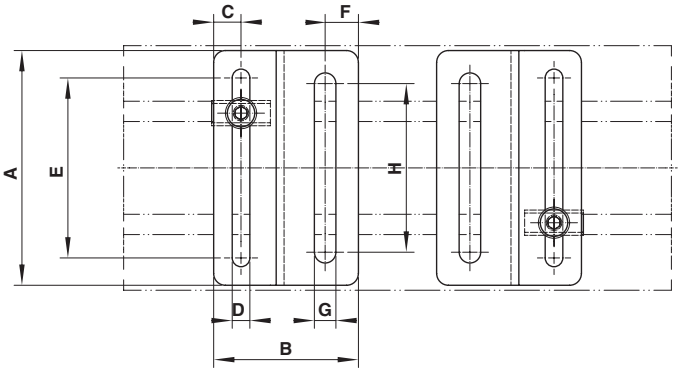

ø	A	B	C	D	E	F	G	H	J	K	SW	(kg)	Model
32/40	45	37	7	4,5	31	8,5	5,5	28,1	12	M4	3	0,06	PQA/802032/22/54
50/63	60	37	7	4,5	46	8,5	5,5	43	12	M4	3	0,08	PQA/802050/22/54
80/100	90	37	7	4,5	76	8,5	6,5	70	12	M4	3	0,11	PQA/802080/22/54
125	135	37	7	4,5	121	8,5	6,5	115	12	M4	3	0,16	PQA/802125/22/54

Our policy is one of continued research and development. We therefore reserve the right to amend, without notice, the specifications given in this document. (2016 - 9159m) © 2024 Norgren GmbH

Valve mounting kit for Round barrel

Dimensions in mm
Projection/First angle

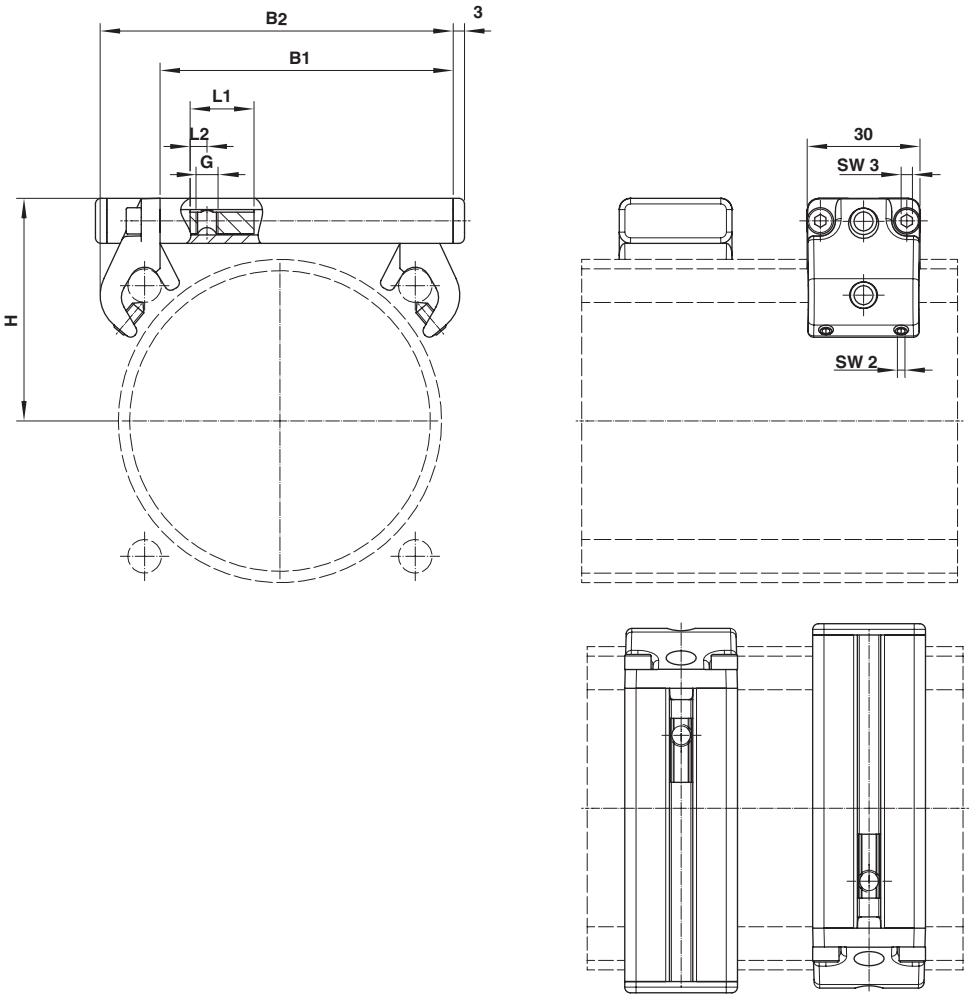

ø	B1	B2	H	L1	L2	G	kg	Model
63	61,5	77,5	50	17	4,5	M4	0,13	QA/8063/22/55/4
63	61,5	77,5	50	17	4,5	M5	0,13	QA/8063/22/55/5
63	61,5	77,5	50	17	4,5	M6	0,13	QA/8063/22/55/6
80	78	94	59,5	17	4,5	M4	0,14	QA/8080/22/55/4
80	78	94	59,5	17	4,5	M5	0,14	QA/8080/22/55/5
80	78	94	59,5	17	4,5	M6	0,14	QA/8080/22/55/6
100	97	113	68	17	4,5	M4	0,19	QA/8100/22/55/4
100	97	113	68	17	4,5	M5	0,19	QA/8100/22/55/5
100	97	113	68	17	4,5	M6	0,19	QA/8100/22/55/6
125	120	136	80	17	4,5	M4	0,21	QA/8125/22/55/4
125	120	136	80	17	4,5	M5	0,21	QA/8125/22/55/5
125	120	136	80	17	4,5	M6	0,21	QA/8125/22/55/6
160	156	175	101,5	17	4,5	M4	0,28	QA/8160/22/55/4
160	156	175	101,5	17	4,5	M5	0,28	QA/8160/22/55/5
160	156	175	101,5	17	4,5	M6	0,28	QA/8160/22/55/6
200	194	231	119	17	4,5	M4	0,31	QA/8200/22/55/4
200	194	231	119	17	4,5	M5	0,31	QA/8200/22/55/5
200	194	231	119	17	4,5	M6	0,31	QA/8200/22/55/6

Our policy is one of continued research and development. We therefore reserve the right to amend, without notice, the specifications given in this document. (2016 - 9159m) © 2024 Norgren GmbH

Recommended Valves

					Recommended Valve Range			
					Inline Valve V60	ISO Valve		3/2 Poppet valve
Cylinder		Tubing	Valve					
ø	Port size	ø	Flow (l/min)	Valve port size				
32	G1/8	6/4	250	1/8"	V60			
40	G1/4	6/4	250	1/8"	V60			
50	G1/4	6/4	250	1/8"	V60			
63	G3/8	8/6	750	1/8"	V60			
80	G3/8	10/7	1250	1/4"	V61	ISO Star	UM/22000	
100	G1/2	10/7	1250	1/4"	V61	ISO Star	UM/22000	
125	G1/2	12/8,5	2500	3/8"	V62	ISO Star	UM/22000	
160	G3/4	16/12	4250	1/2"	V63	ISO Star	UM/22000	
200	G3/4	16/12	4250	1/2"	V63	ISO Star	UM/22000	
250	G1	22/17	6000	3/4"			UM/22000	
320	G1	26/18	10000	1"			UM/22000	80265

Customer Solution Cylinder valve unit
For additional information please contact the technical service

Warning

These products are intended for use in industrial compressed air systems only. Do not use these products where pressures and temperatures can exceed those listed under »**Technical features/ data**«.
Before using these products with fluids other than those specified, for non-industrial applications, life-support systems or other applications not within published specifications, consult Norgren GmbH.

Through misuse, age, or malfunction, components used in fluid power systems can fail in various modes.

The system designer is warned to consider the failure modes of all component parts used in fluid power systems and to provide adequate safeguards to prevent personal injury or damage to equipment in the event of such failure.
System designers must provide a warning to end users in the system instructional manual if protection against a failure mode cannot be adequately provided.
System designers and end users are cautioned to review specific warnings found in instruction sheets packed and shipped with these products.

Our policy is one of continued research and development. We therefore reserve the right to amend, without notice, the specifications given in this document. (2016 - 9159m) © 2024 Norgren GmbH